FUNDAMENTALS, APPLICATIONS AND OPEN PROBLEMS IN TWO CLASSES OF SWITCHING POWER CONVERTERS

LUIS MARTINEZ SALAMERO

ESCUELA TÉCNICA SUPERIOR DE INGENIERÍA

UNIVERSIDAD ROVIRA I VIRGILI

TARRAGONA, ESPAÑA

Research Activities

http://deeea.urv.cat/gaei/index.php

GAEI
Grup d'Automàtica i Electrònica Industrial

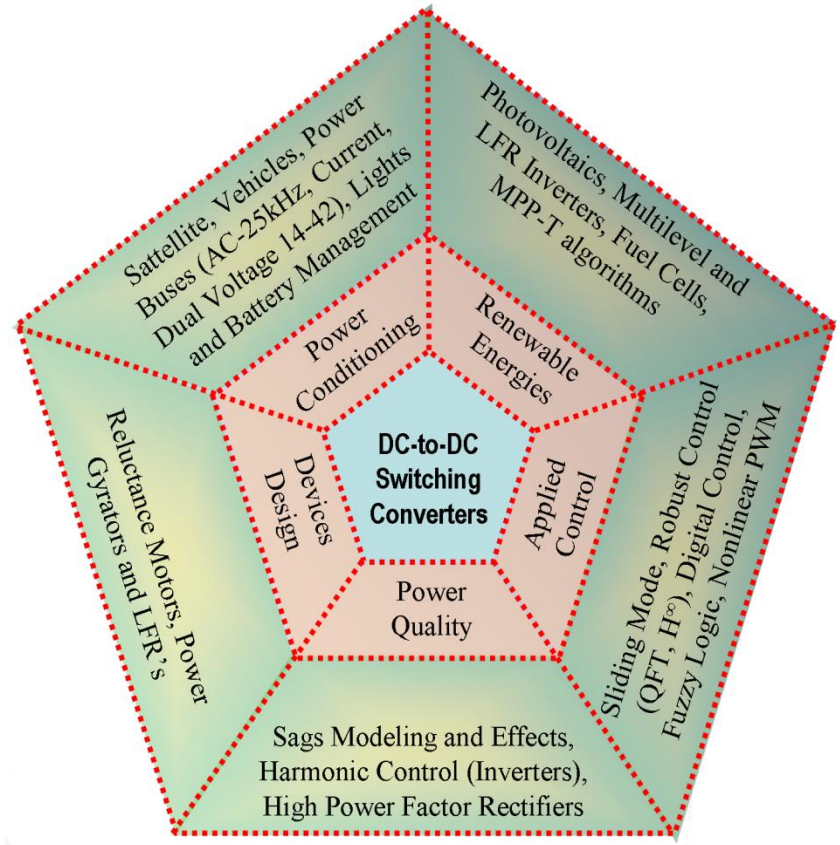

OUTLINE

❑ CONTEXT

❑ POWER ELECTRONICS : A BRIEF REVIEW

▪ DOMAIN

Conversion and Control of Electric Energy for Industrial or Domestic Applications

❑ POWER ELECTRONICS : A BRIEF REVIEW

▪ INTERDISCIPLINARY SUBJECT

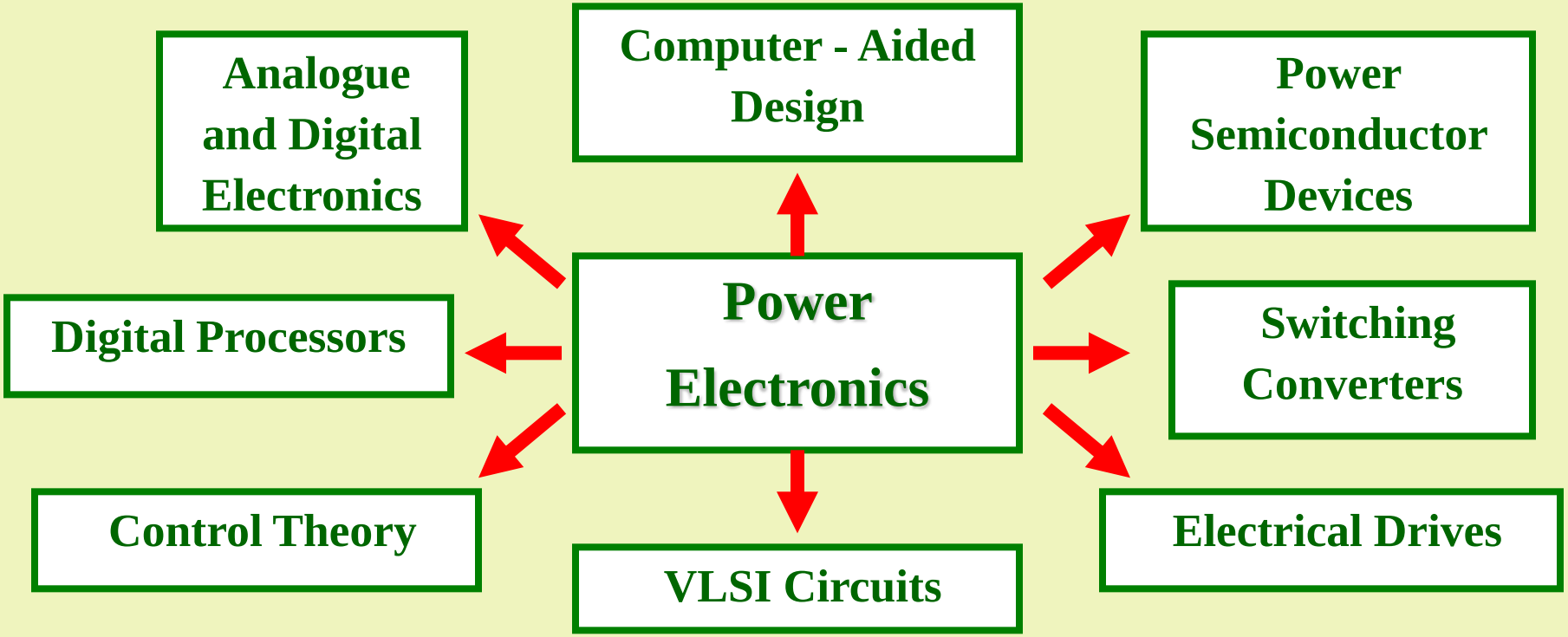

❑ POWER ELECTRONICS : A BRIEF REVIEW

▪ INTERDISCIPLINARY EXPERTISE

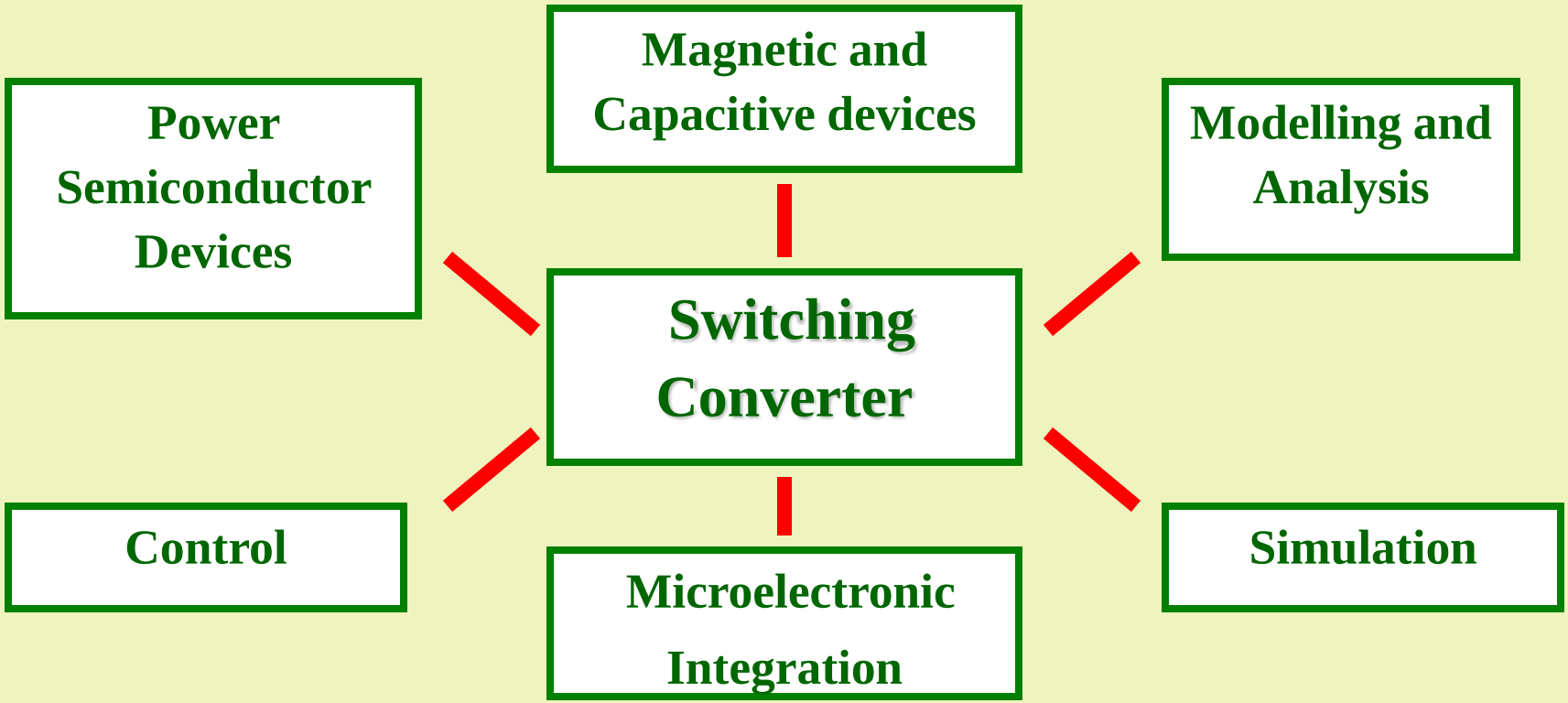

❑ POWER ELECTRONICS : A BRIEF REVIEW

▪ General specifications of a power converter

DC-DC Switching converter

Extract energy from and external source

Supply energy to the load according to specifications

- **Battery**
- **PV Panel**
- **AC-DC Rectifier**
- **Fuel Cell**

- **Constant consume and strict values of output voltage (Instrumentation)**
- **Pulsating consume (laser supply)**
- **Variable consume (motor supply)**

❑ POWER ELECTRONICS : A BRIEF REVIEW

- **First Reference on DC-DC Switching Power Converters**

O. Kossov, "Comparative analysis of chopper voltage regulators with LC filter"IEEE Transactions on Magnetics, Vol. 4, Iss. 3, September 1968 pp 340.

Where are we now 50 years after one-page Kossov's publication ?

US Patent and Trademark Office

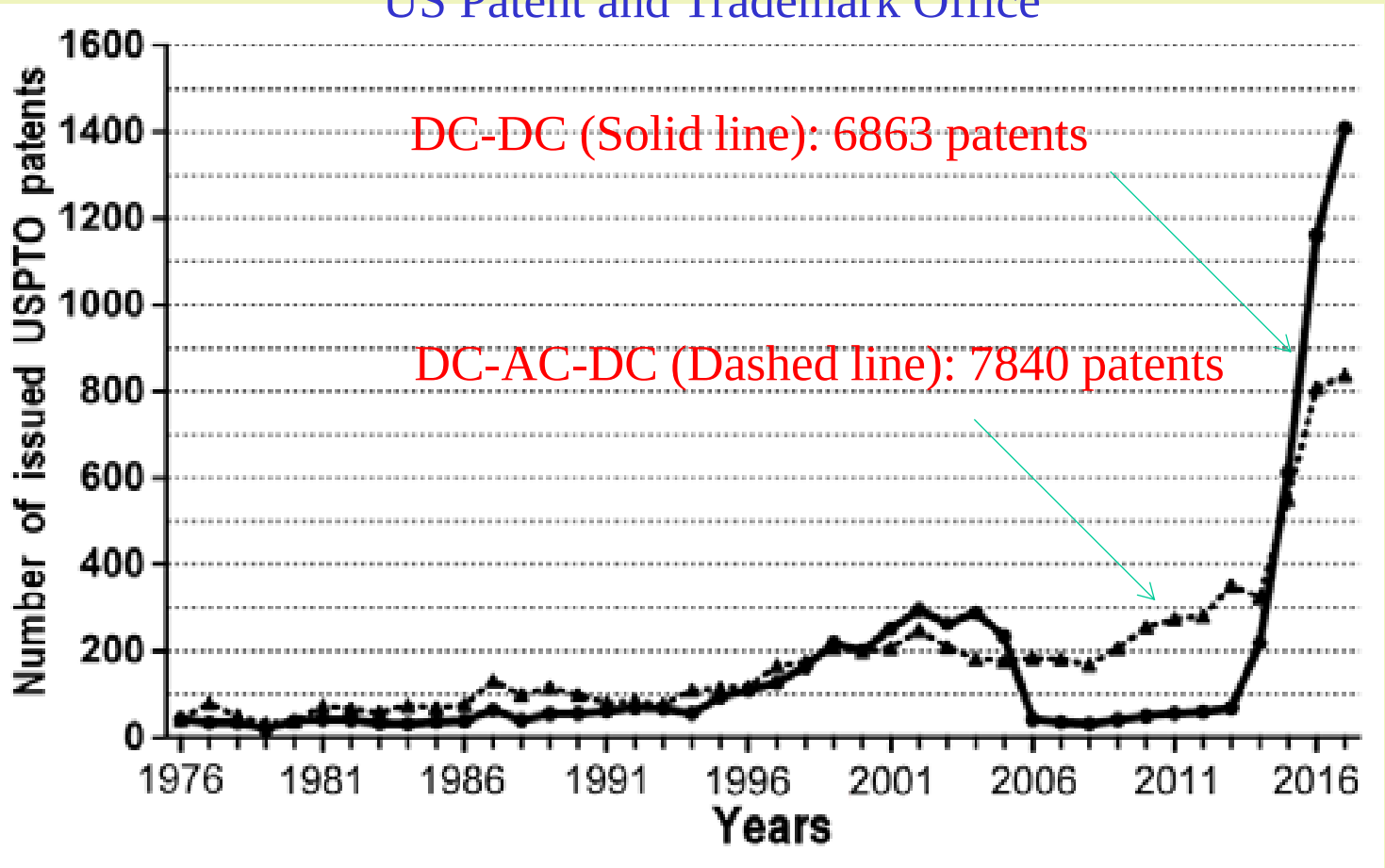

V.I. Avdzejko, V.I. Karnyshev, R.V. Meshcheryakov, "Forecasting of power electronics development directions based on international patent classification time series" Electrotechnics,Information and Complex Systems" Vol.12, no.2, 2016, pp 23-28

❑ CONTEXT

Concern for the global warming is increasing the interest for renewable energies.

Underpinning a sustainable environment implies more efficient devices and better control strategies for electric energy conversion.

Two vectors catalize the new research:

Technology : -Wide-gap power devices
- Digital processors

New paradigm in power distribution: - Vehicles
- Smart grids

❑ CONTEXT

Three fields have recently emerged:

Efficient lighting

Contacless power supply

} **Resonant conversion**

Constant power load supply → **Non-linear control**

EFFICIENT LIGHTING

- Low Energy Consumption
- Low Maintenance Cost
- Improved Light Quality
- Reduction of CO_2 emissions.

- ***Artificial lighting ≈ 19% worldwide electricity production***

❑ EFFICIENT LIGHTING TYPES

Category	IEFL Lamp	Fluorescent Lamp	High Pressure Mercury Vapour	High Pressure Sodium Vapour	Metal Halide Lamp	LED Lamp
Light Efficiency (lm/W)	70-80	25-70	30-50	90-110	85	20-80
Effective Light Efficiency (PLM/W) (lumens measurement for human pupil)	113-130	40-112	26-43	51-63	126	50-100
Color Rendering index (Ra = CRI)	>80	50-80	30-40	<40	65	70-80
Power Factor	>0.98	0.35-0.95	0.44-0.67	0.44	0.4-0.6	1
Cold start time	Instant.	< 3’’	4-10’	4-10’	4-10’	Instant.
Restart time	Instant.	<1’’	10-15’	10-15’	10-15’	Instant.
Stroboscopic effect	No	Sometimes	Sometimes	Sometimes	Sometimes	No
Lamplife (hrs.)	80000	5000-10000	3500-6000	8000-14000	10000	50000-80000

EFFICIENT LIGHTING

Example : A two-stage versatile ballast for discharge lamps

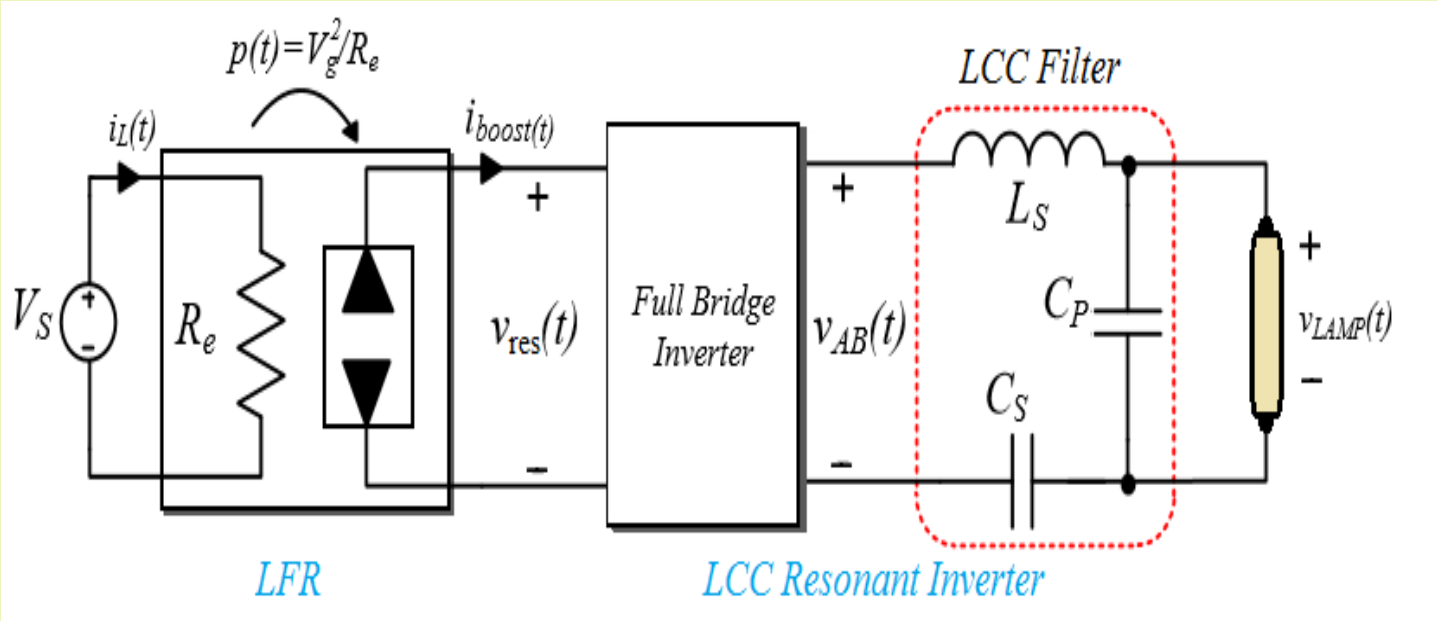

A.Leon-Masich, “High Voltage Efficient Lighting Based on the Loss-Free Resistor Concept“ Ph.D. dissertation , DEEEA, URV, Tarragona, Spain, July 2015

EFFICIENT LIGHTING

Example : A two-stage versatile ballast for discharge lamps

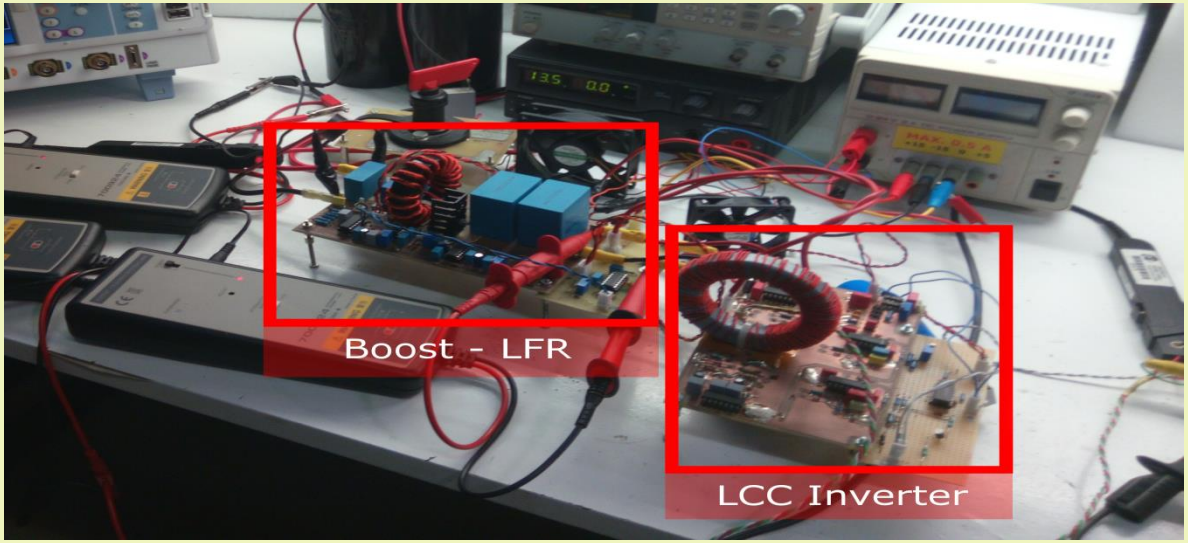

EFFICIENT LIGHTING

Example : A two-stage versatile ballast for discharge lamps

Steady-state

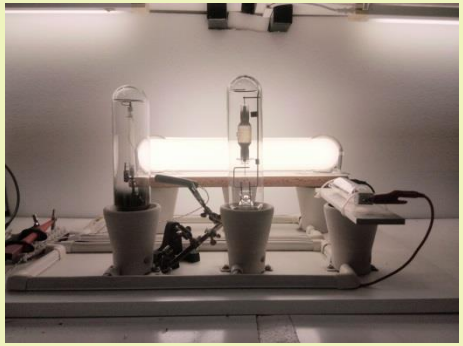

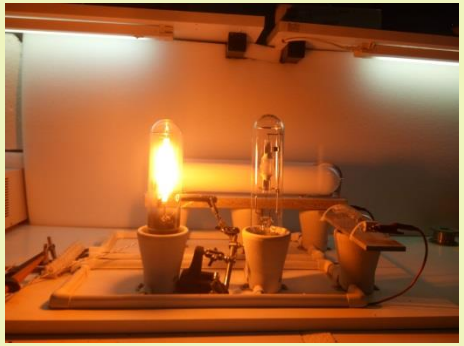

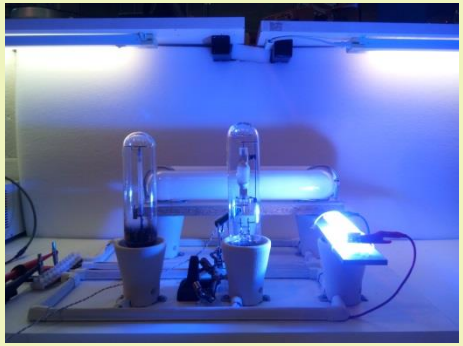

Warm-up and steady-state

❑ EFFICIENT LIGHTING

A first question arises:

Can we develop a one-stage efficient balast ?

CONTACLESS POWER SUPPLY

Common Application of Contactless Power

Heating generation

Battery charging

❑ CONTACLESS POWER SUPPLY

Principle of Contactless Power Transfer

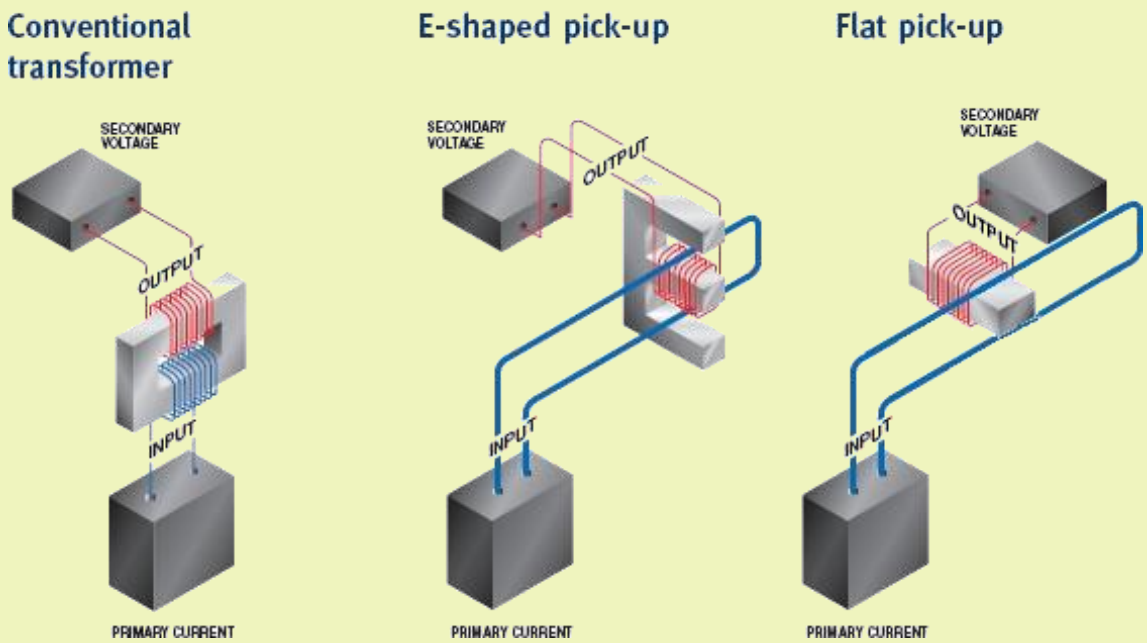

F.Turki (Vahle GmbH&Co.KG, Kamen, Germany), "An introduction to wireless power transfer: basics, applications and design" GAEI Seminar, June 20th 2014, Tarragona, Spain

❑ CONTACLESS POWER SUPPLY

Industrial System Components

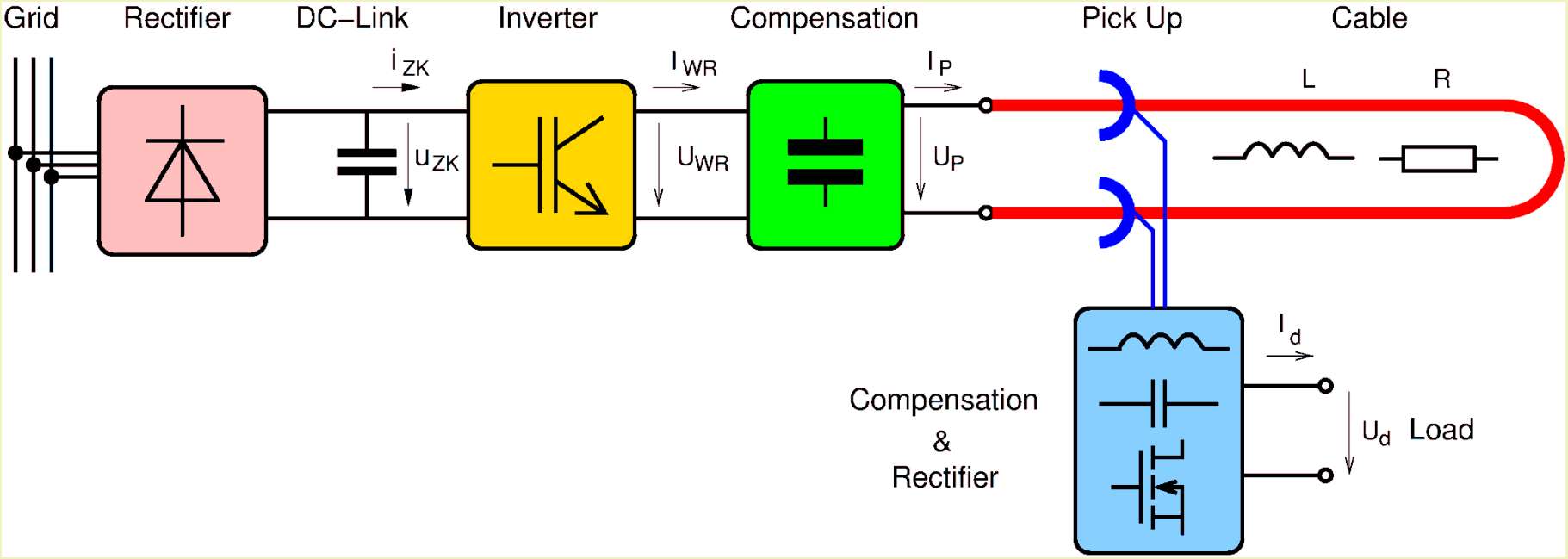

System overview of a contacless power supply application

❑ CONTACLESS POWER SUPPLY

Vahle 3kW Charging Systems for Electric Vehicles

Location at the bottom of the car

Location under the number plate

❑ CONTACLESS POWER SUPPLY

Fleet test with Karabag GmbH Hamburg.

Conductive charging (3 kW) also possible.

❑ CONTACLESS POWER SUPPLY

A second question arises:

Can we develop a simple battery charger either conductive or contacless ?

❑ CONSTANT POWER LOAD SUPPLY

Electric vehicle power distribution architecture

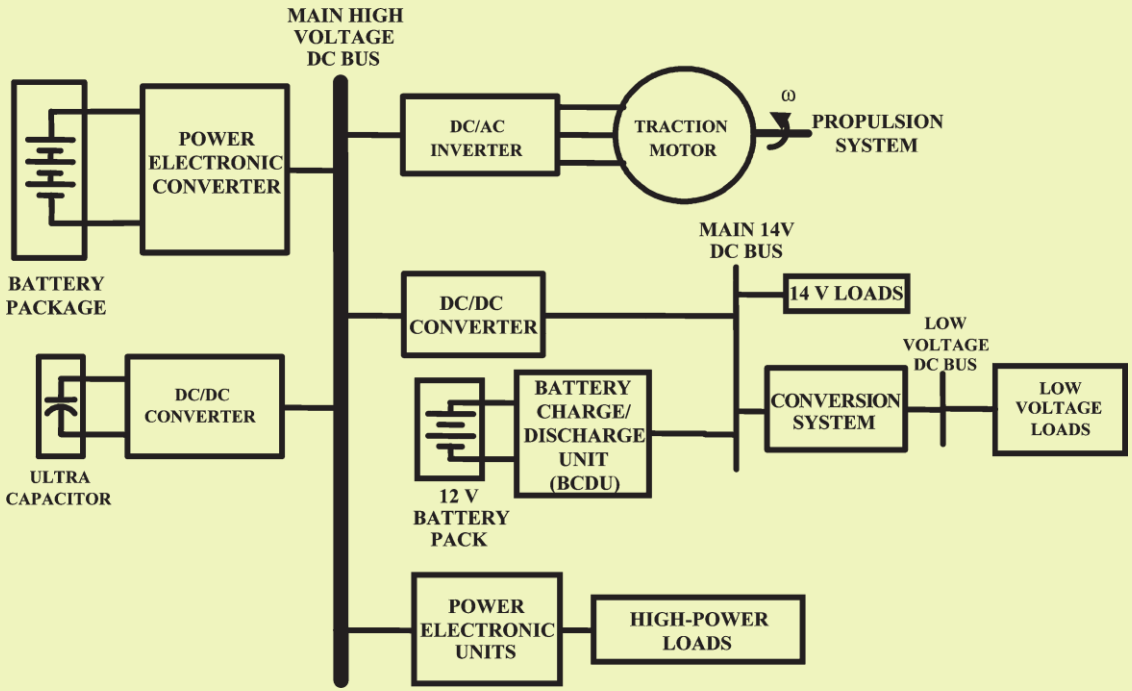

A.Emadi et al. "Constant power loads and negative impedance instability in automotive systems: Definition, modeling,stability, and control of power converters and motor drives" IEEE Trans. on Vehicular Technology , vol. 55,no.4, July 2006, pp.1112-1125

CONSTANT POWER LOAD SUPPLY

Electric vehicle CPL operation

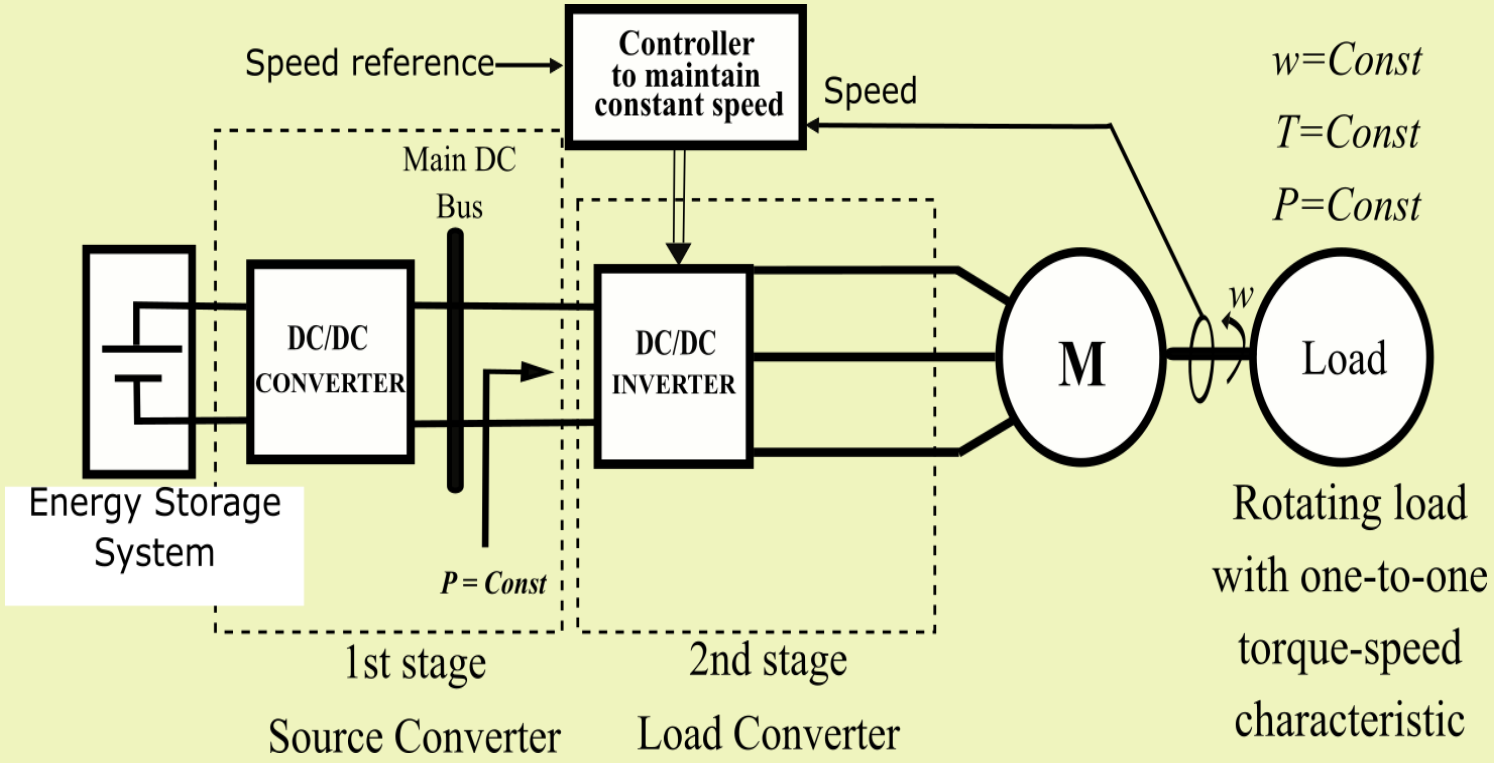

❑ CONSTANT POWER LOAD SUPPLY

A generalized architecture for EV : multiconverter system notion

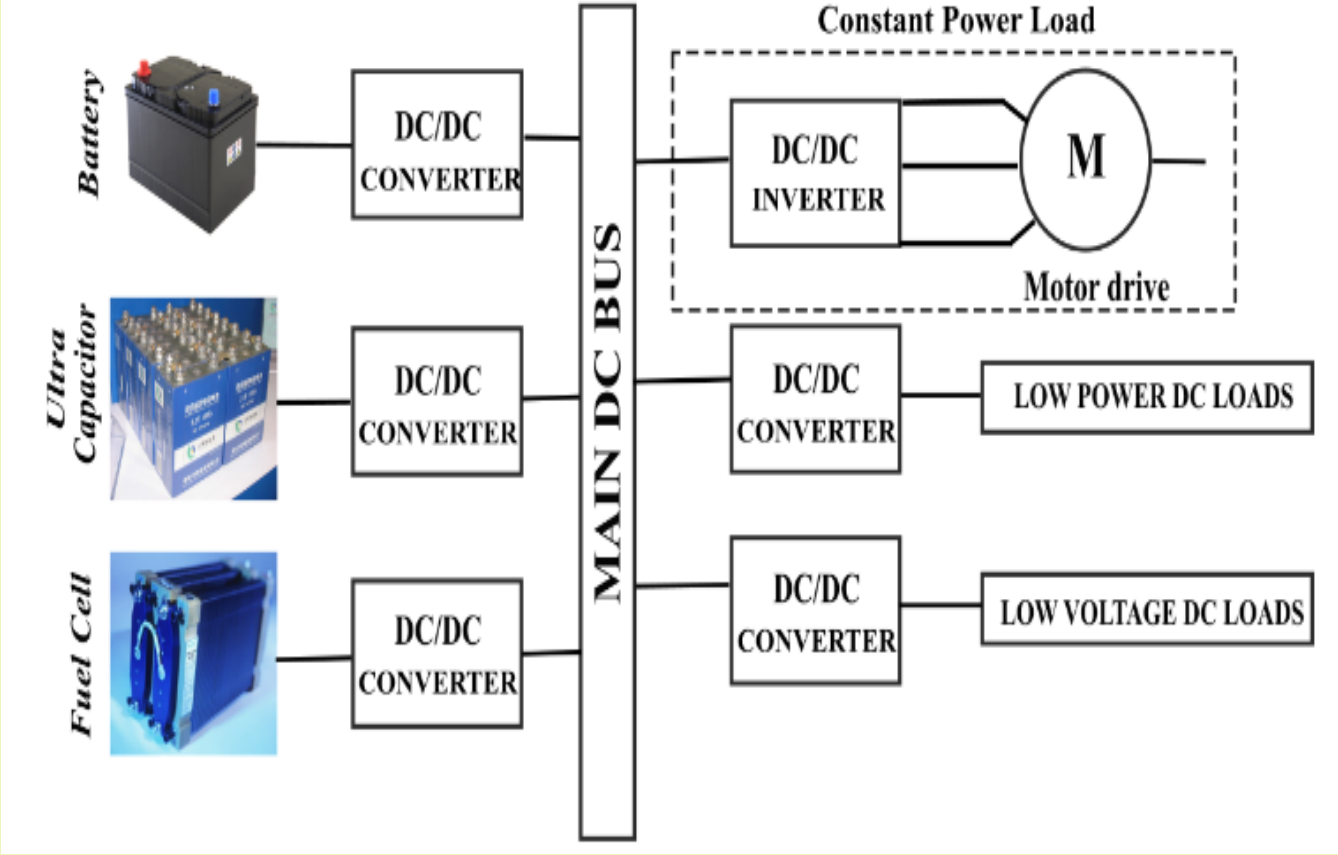

Medium voltage DC bus for power distribution in ships

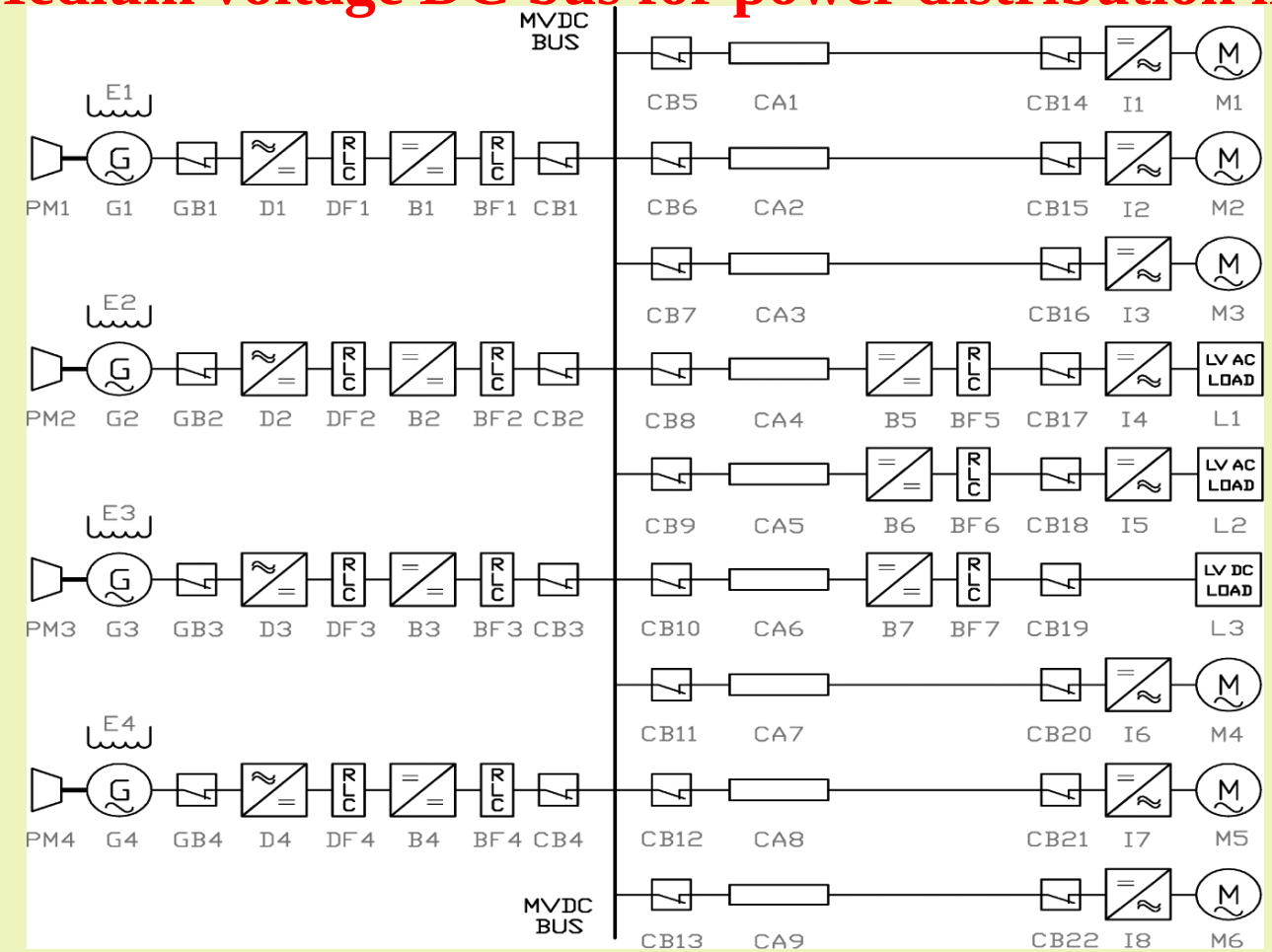

G.Sulligoi et al."Multiconverter Medium Voltage DC Power Systems on Ships: Constant -Power Load Instability Solution Using Linearization via State Feedback Control " IEEE Trans. on Smart Grids, Vol.5,no.5,September 2014, pp . 2543-2552

CONSTANT POWER LOAD SUPPLY

Medium voltage DC bus for power distribution in ships

Circuit model for CPL supply

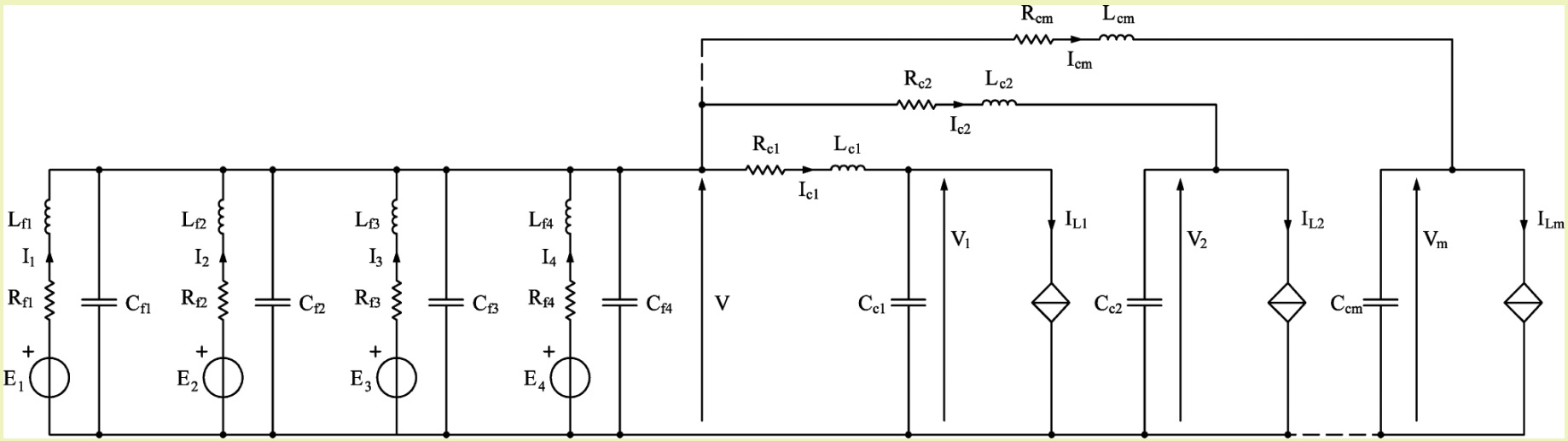

Unstable behaviour of the bus voltage

$$\frac{d^2V}{dt^2} = -\left(\frac{1}{C_{eq}\ L_{eq}}\right)V - \left(\frac{1}{T_f}\right)\frac{dV}{dt} + \frac{E_1}{C_{eq}\ L_{f1}} + \frac{E_2}{C_{eq}\ L_{f2}} + \frac{E_3}{C_{eq}\ L_{f3}} + \frac{E_4}{C_{eq}\ L_{f4}} - \frac{P_{eq}}{C_{eq}\ T_f\ V} + \frac{P_{eq}}{C_{eq}\ V^2}\frac{dV}{dt}$$

❑ CONSTANT POWER LOAD SUPPLY

A canonical problem

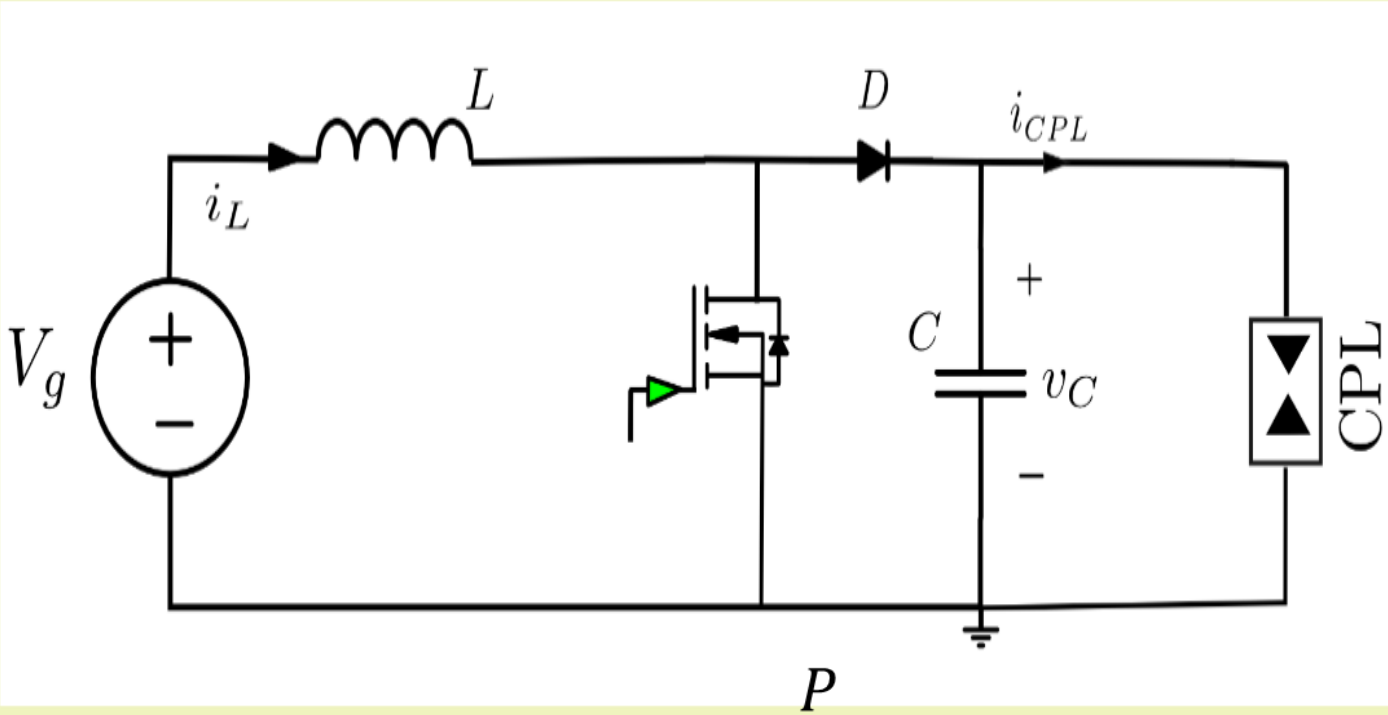

$$i_{CPL} = \frac{P}{v_C}$$

❑ CONSTANT POWER LOAD SUPPLY

DC-DC switching converters with CPL are open-loop unstable

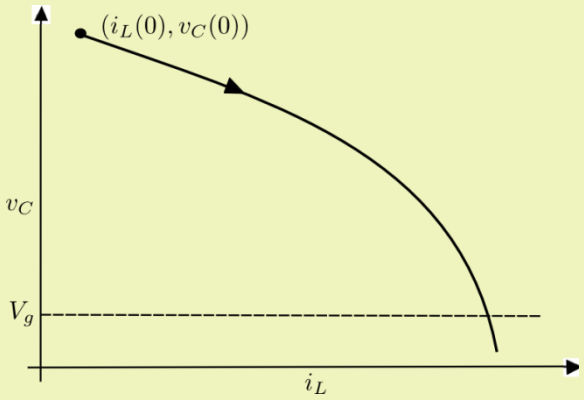

On trajectory

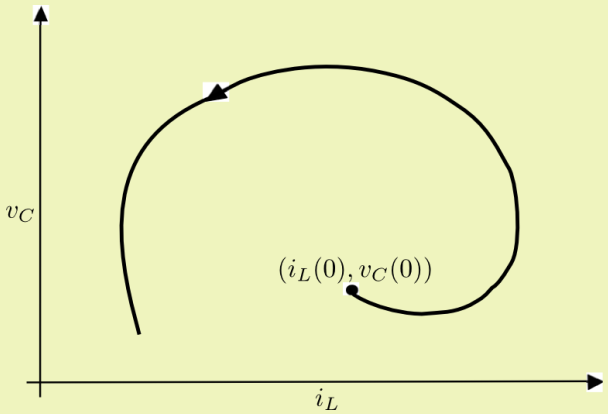

Off trajectory

They don't belong to the family of switched -affine systems

CONSTANT POWER LOAD SUPPLY

How are CPL problems tackled ?

- Passive damping
- Active damping : notion of virtual resistor
- Non-linear control

❑ CONSTANT POWER LOAD SUPPLY

How are CPL problems tackled ?

Most existing solutions employ a CPL defined mathematically in a simulation frame.

A simple cascade connection of a converter acting as source and a converter behaving as a CPL has been rarely explored and no experiments have been reported

❑ CONSTANT POWER LOAD SUPPLY

A third question arises:

Can we tackle the problem of CPL supply in the cascade connection of two real converters?

❑ SELF-OSC. FOR SINUSOIDAL GENERATION

Self-oscillating resonant converters are a possible response to the first two questions:

Can we develop a one-stage efficient balast ?

Can we develop a simple battery charger ?

RESONANT CONVERTERS

Principle

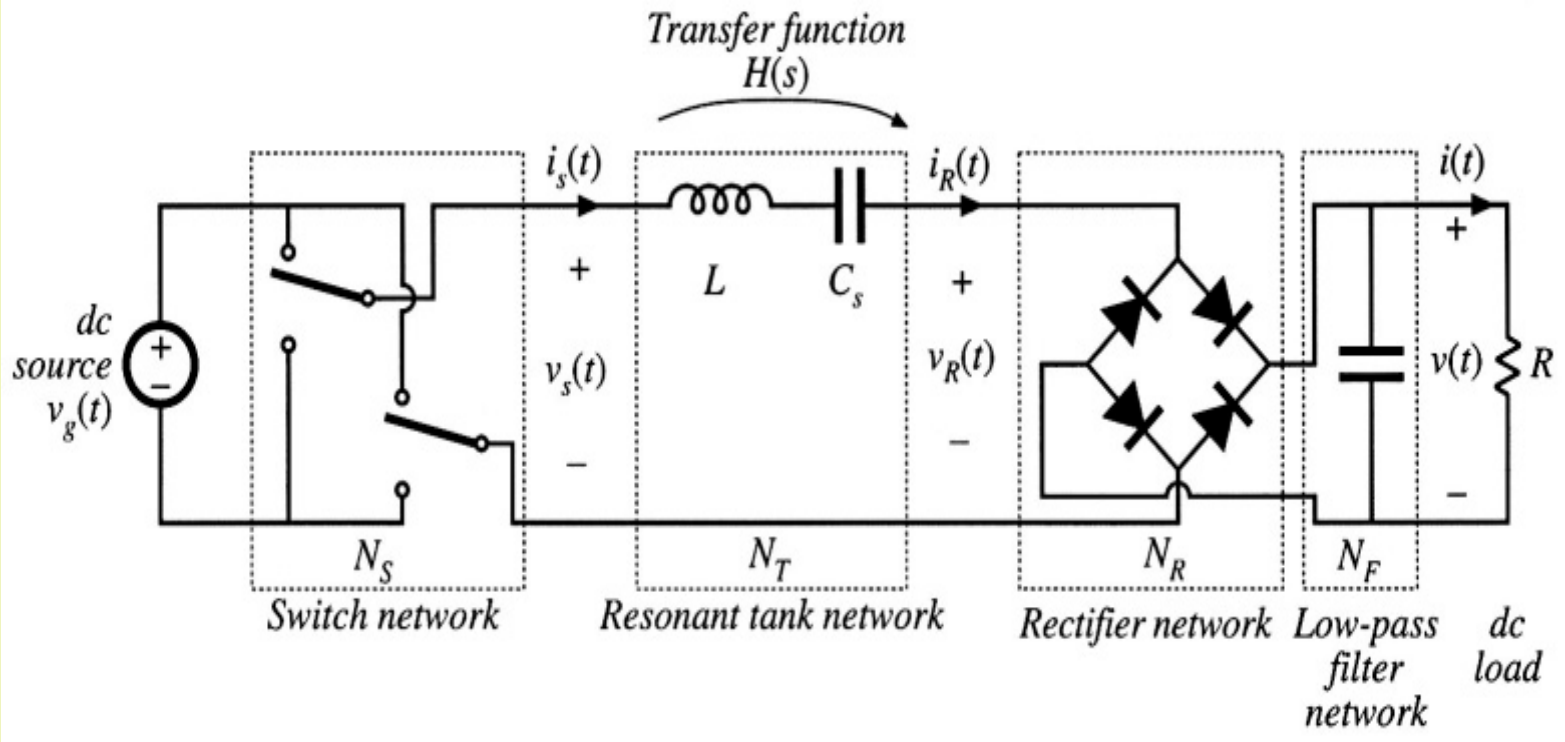

R.W.Erickson and D. Maksimovic "Fundamentals of Power Electronics, 2nd Edition, Kluwer Academic Publishers 2001".

RESONANT CONVERTERS

- A recent example of resonant conversion

U.S. Patent Mar. 1, 2016 Sheet 1 of 15 US 9,276,480 B2

Frequency or phase modulation

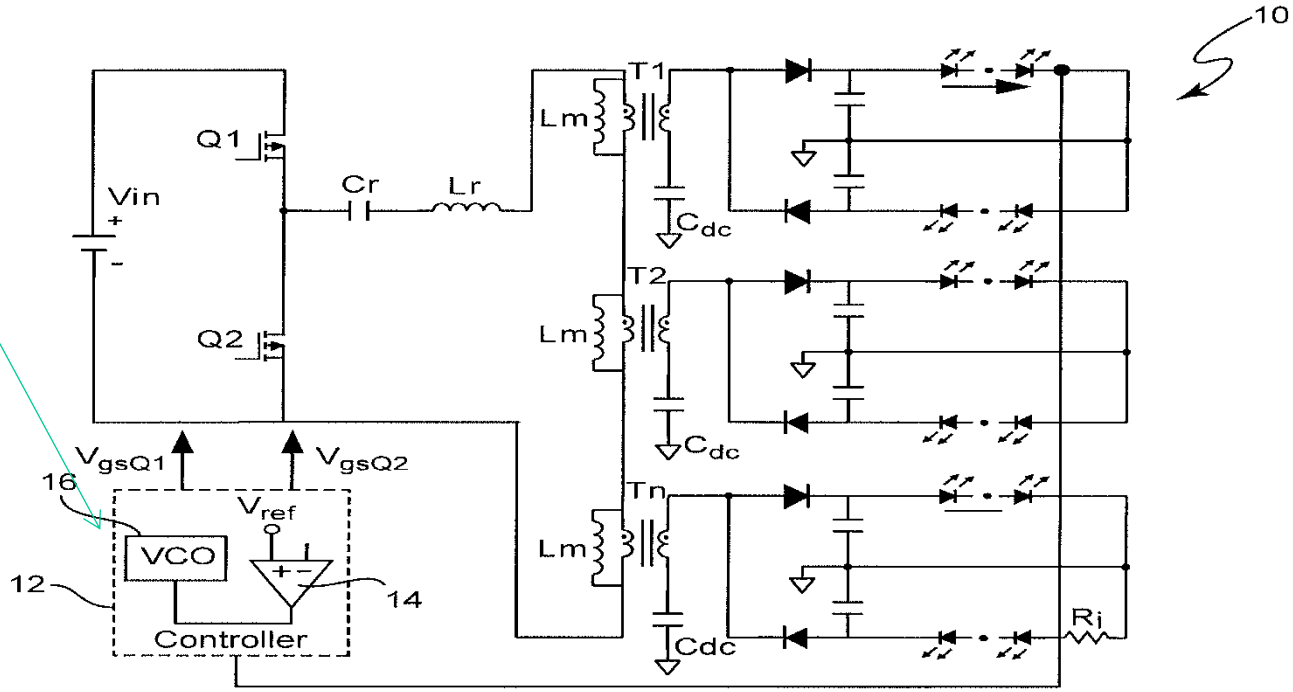

A class of self-oscillating resonant converters

R.Bonache-Samaniego, “Self-Oscillating Resonant Converters: General approach and applications“ Ph.D. dissertation , DEEEA, URV, Tarragona, Spain, February 2017

❑ SELF-OSC. FOR SINUSOIDAL GENERATION

(a) Operating principle of self-oscillating resonant converters with LFR characteristics:

u=1 for iL>0 ; u=0 for iL<0

(b) Steady-state behavior

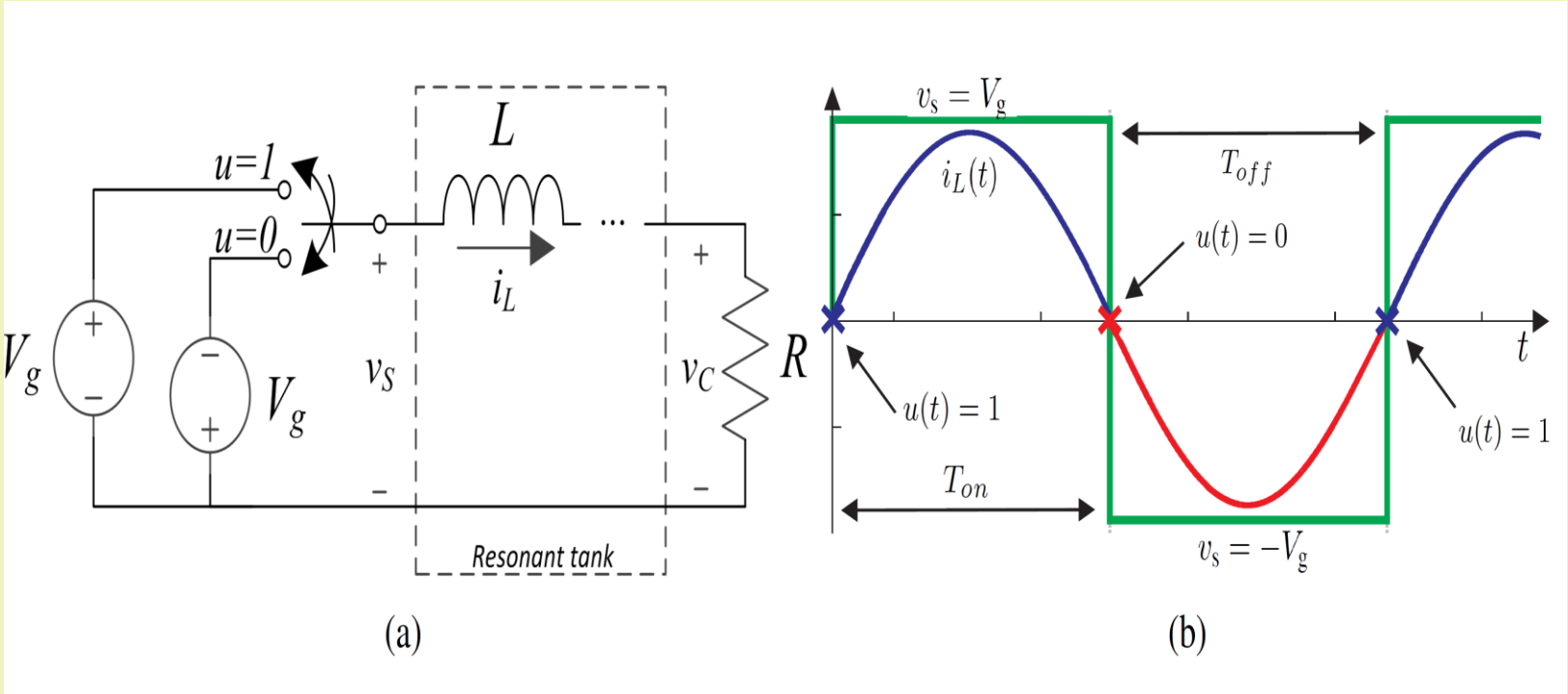

❑ SELF-OSC. FOR SINUSOIDAL GENERATION

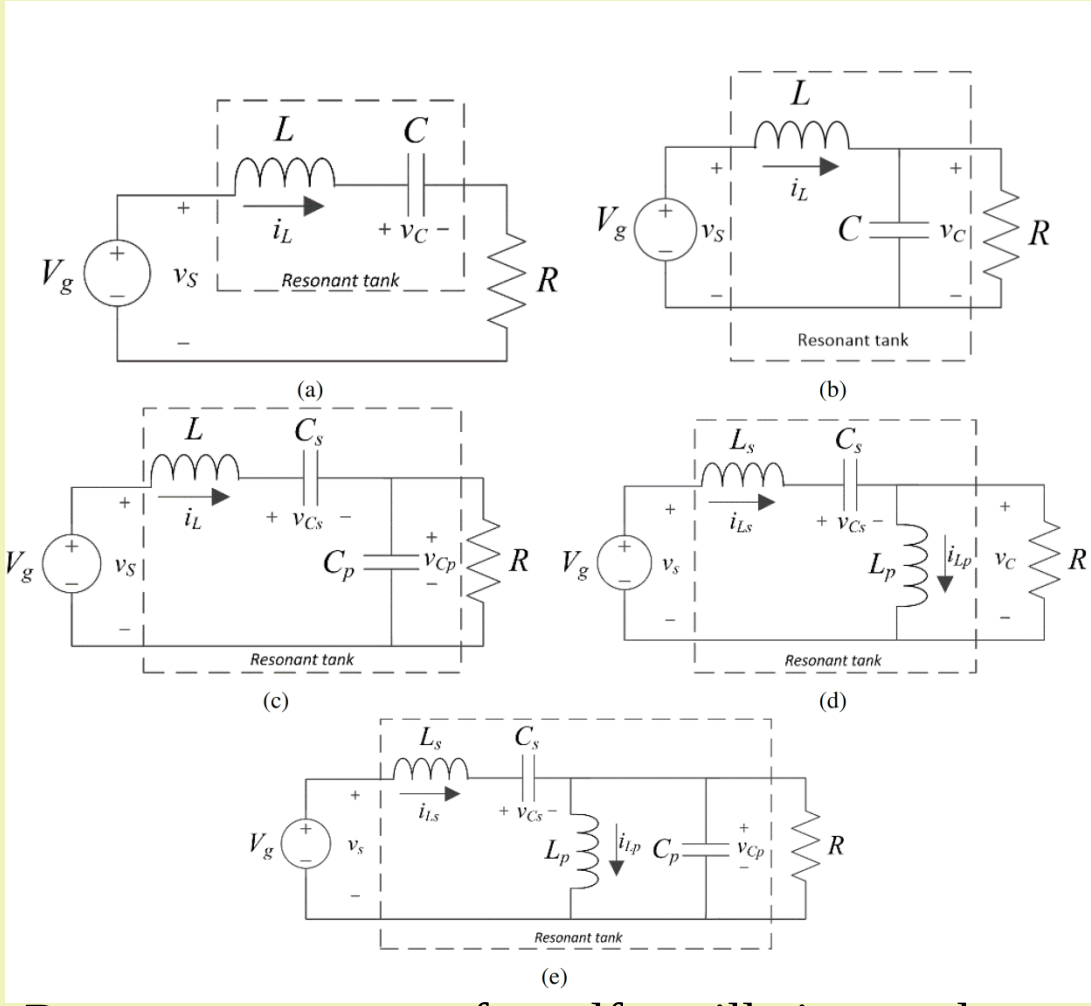

Resonant converters for self-oscillating mode
(a) SRC (b) PRC (c) LCC (d) LCL (e) LCLC

❑ SELF-OSC. FOR SINUSOIDAL GENERATION

Second order resonant converters

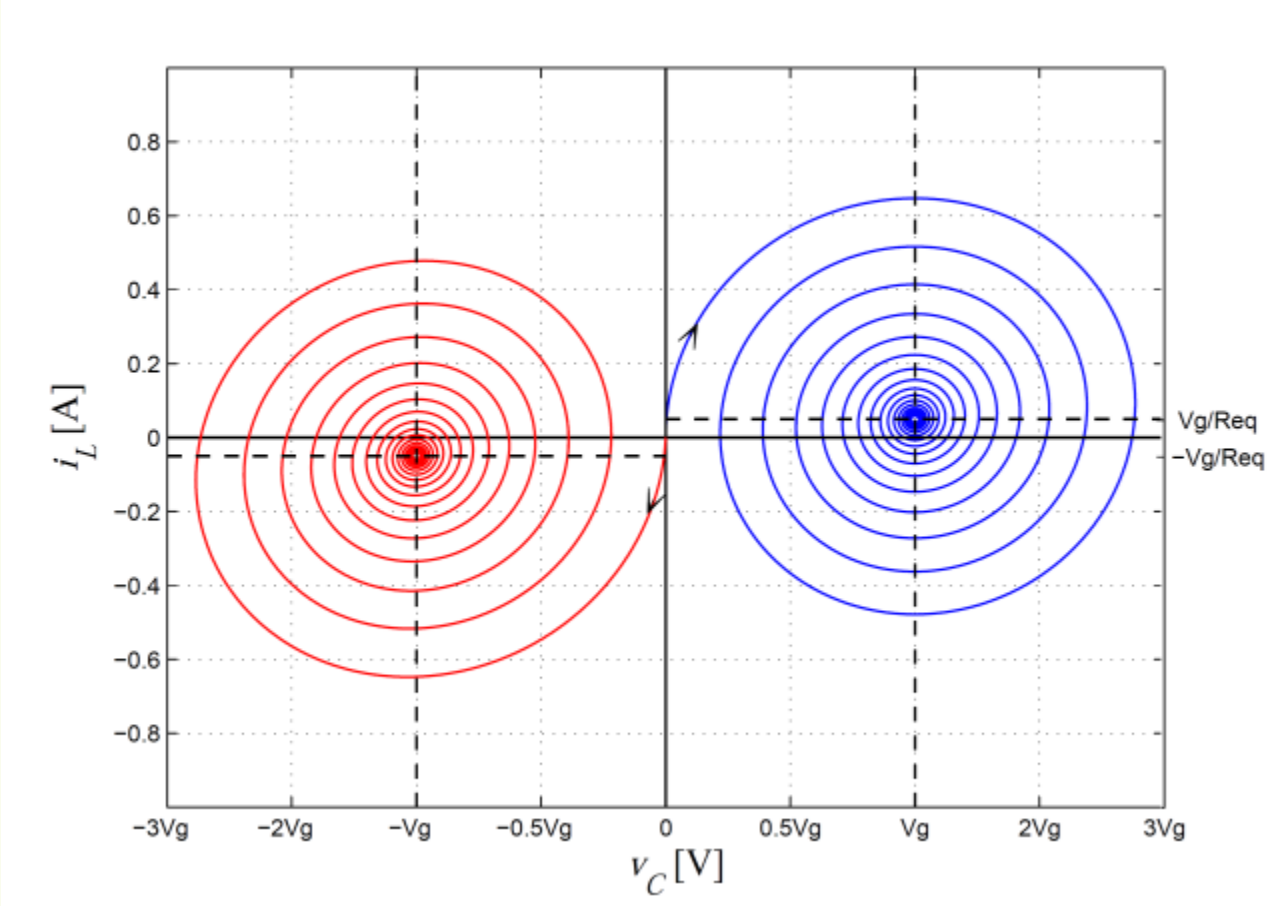

❑ SELF-OSC. FOR SINUSOIDAL GENERATION

Second order resonant converters

Q>3.15

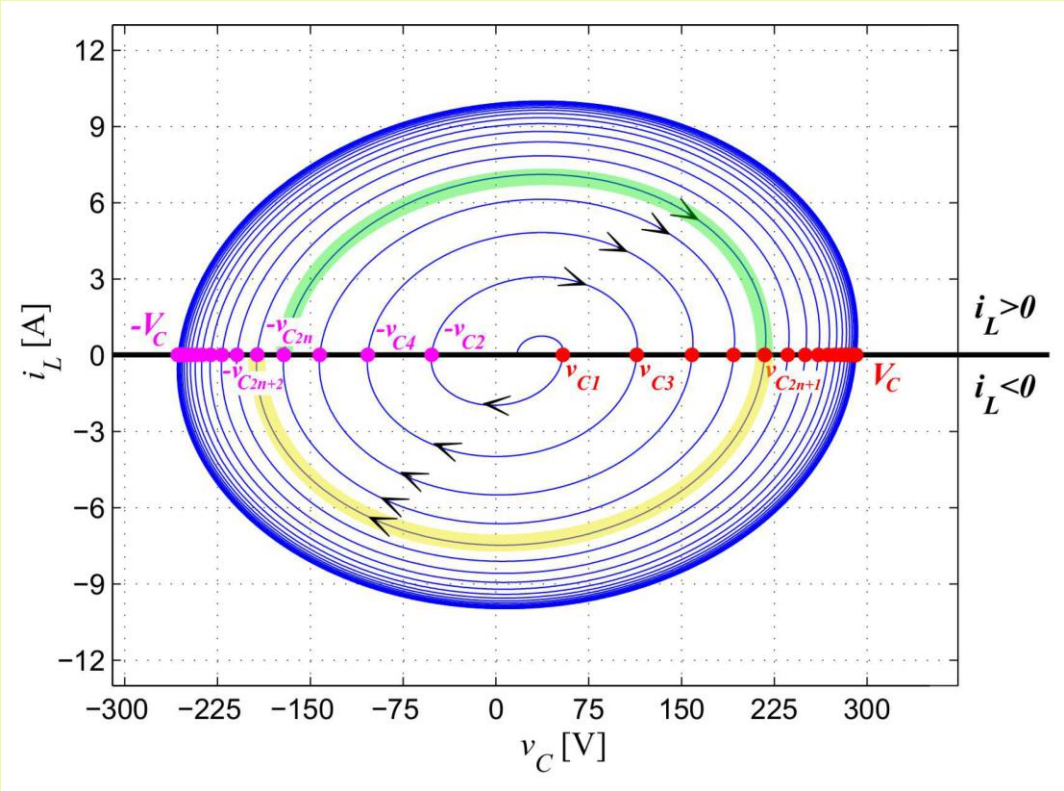

Matlab simulation of the self-oscillation mechanism in a PRC in the phase plane for C=10.5 nF, L=8 μH, , V_g=20 V.

❑ SELF-OSC. FOR SINUSOIDAL GENERATION

Second order resonant converters

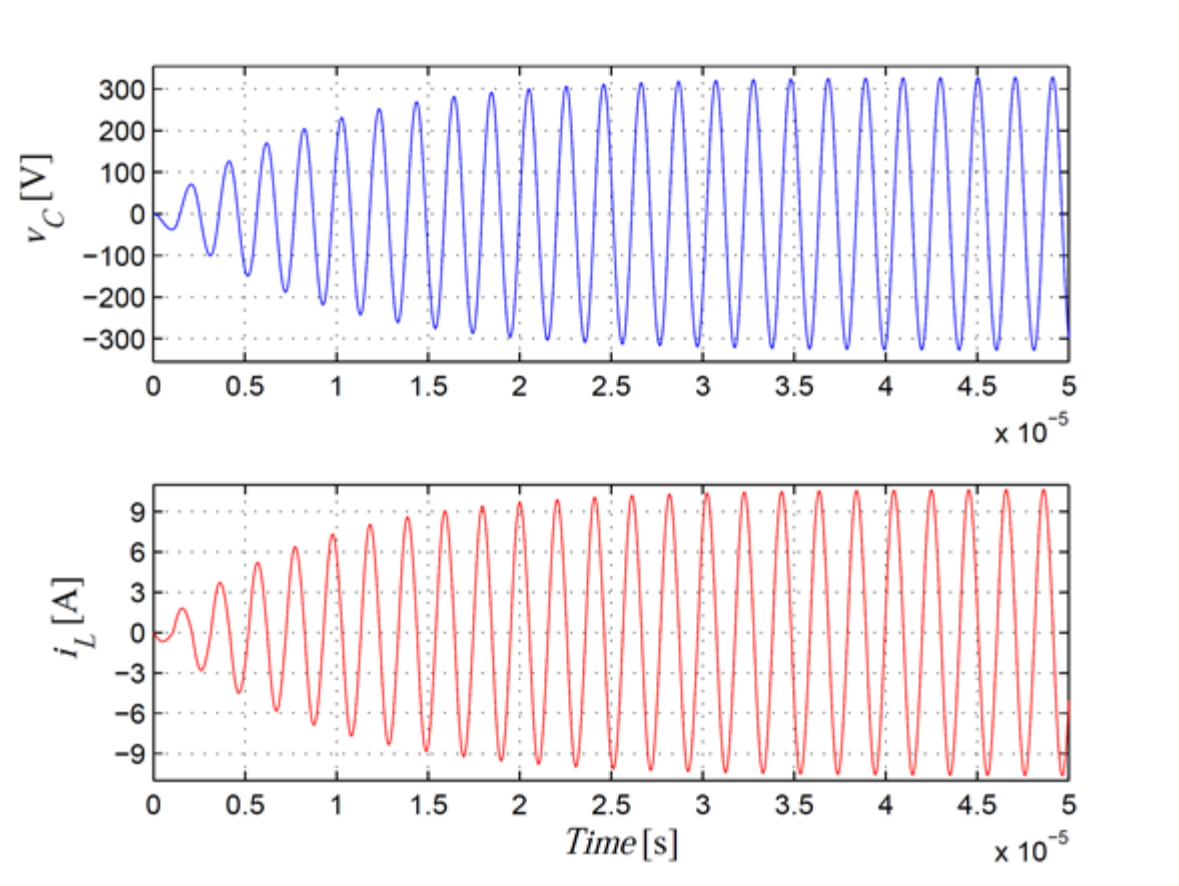

❑ SELF-OSC. FOR SINUSOIDAL GENERATION

Second order resonant converters

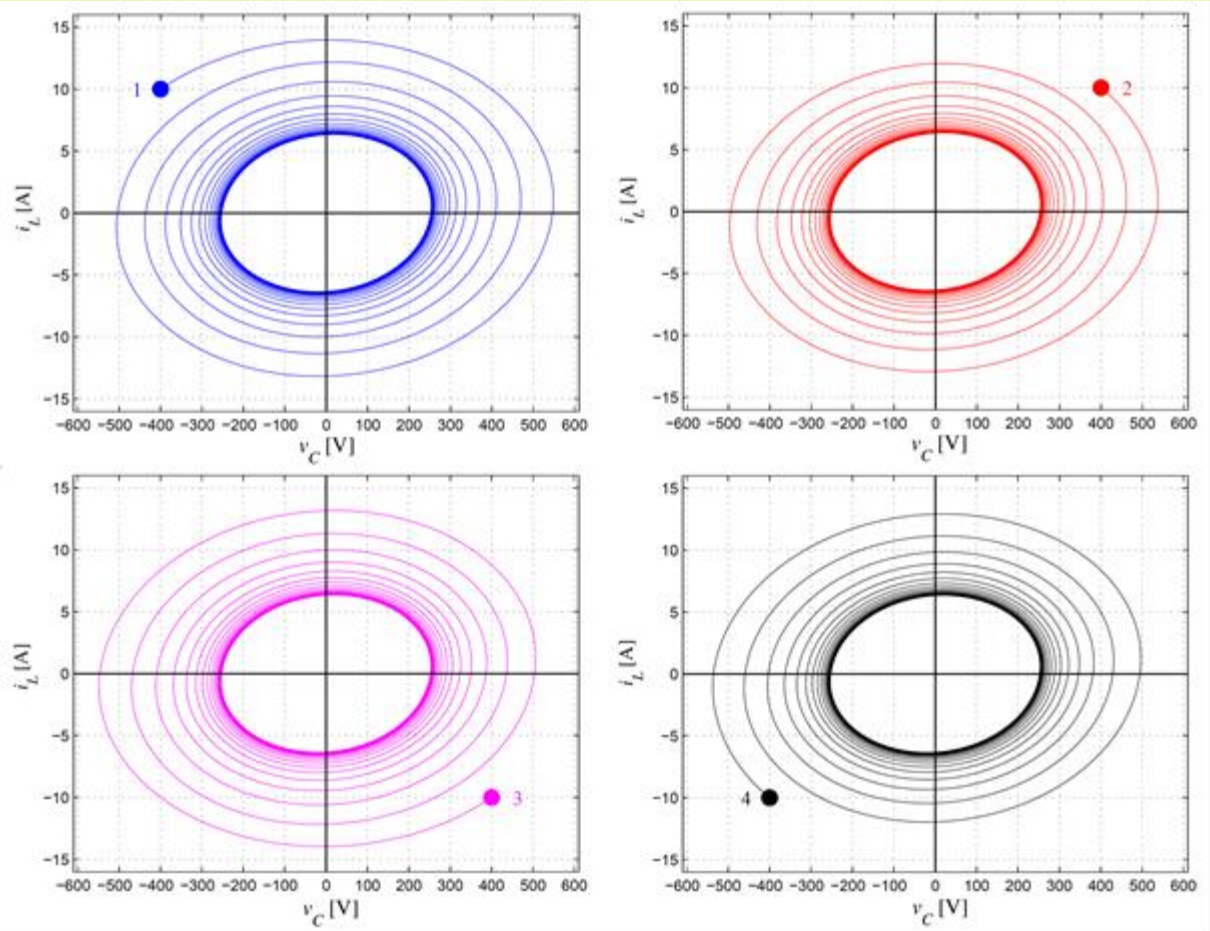

❑ SELF-OSC. FOR SINUSOIDAL GENERATION

Second order resonant converters

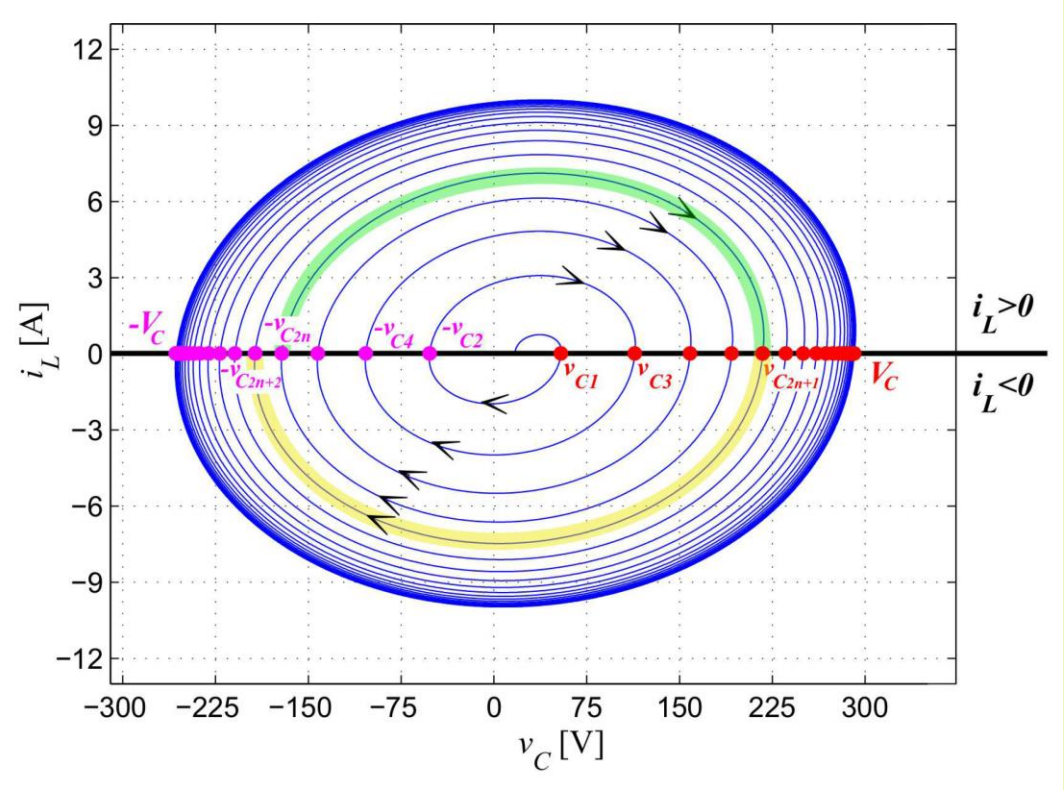

$$T = \frac{2\pi}{\omega_0}$$

$$-v_{C2n+2} = (G + Gr + Gr^2 + \ldots + Gr^{n-1}) - v_{C2} r^n \qquad G = -V_g (1 + e^{-\xi\pi})^2 \qquad r = e^{-2\pi}$$

$$\lim_{n\to\infty} v_{C2n+2} = \frac{G}{1-r} = \frac{-V_g (1+e^{-\xi\pi})^2}{1-e^{-2\pi}} = \frac{-V_g (1+e^{-\xi\pi})}{1-e^{-\xi\pi}}$$

❑ SELF-OSC. FOR SINUSOIDAL GENERATION

Example: 6.78 Mhz self-oscillating parallel resonant converter based on GaN technology

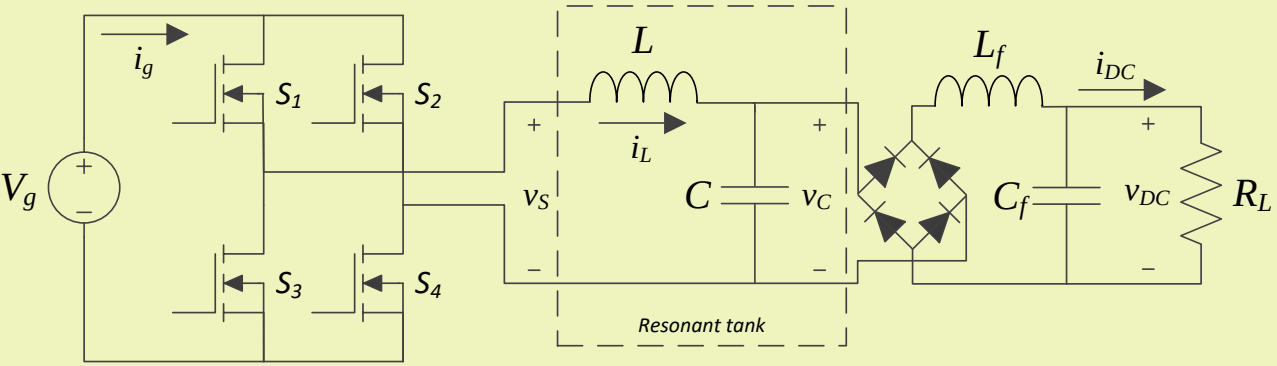

Circuit diagram of a parallel resonant converter

Advantages:

- Closer operation to the resonant frequency regardless of uncertainty of the components and load/line variations.
- Straightforward realization.
- Reduced number of components.
- Inherent behavior as LFR.

Drawbacks:

- No output voltage regulation. Gain depends on the load.
- High impact of the propagation delays on the operation of the converter.

Self-oscillating control provides:

- Simplicity: no external oscillator is required.
- Oscillation at the resonant frequency in spite of uncertainty.

❑ SELF-OSC. FOR SINUSOIDAL GENERATION

Example: 6.78 Mhz self-oscillating parallel resonant converter based on GaN technology

Design procedure

1. Define input and output voltage.
2. Define the desired switching frequency ω_0 and the load R_L.
3. Find Q.

$$Q = V_{out} / V_{in} = 4.1$$

4. Evaluate if $Q \geq 3.15$.
5. Calculate the value of the parallel capacitor.

$$C_p = Q / (\omega_0 \cdot R) = 1.44 \text{ nF}$$

6. Calculate the value of the inductance.

$$L = 1 / (\omega_0^2 \cdot Cp) = 382 \text{ nH}$$

AirFuel Alliance standard design parameters

Parameter	Value
V_g	12 V
$R_{L,\,max}$	57 Ω
f_0	6.78 MHz (± 150 kHz)
V_{out}	30 V
P_{out}	16 W

❑ SELF-OSC. FOR SINUSOIDAL GENERATION

Prototype Implementation

Limitations of the Implementation

A. **The current sensing stage requires large bandwidth and noise rejection.**

B. **Effect of the propagation delay introduced by control circuit (comparator) and driver.**

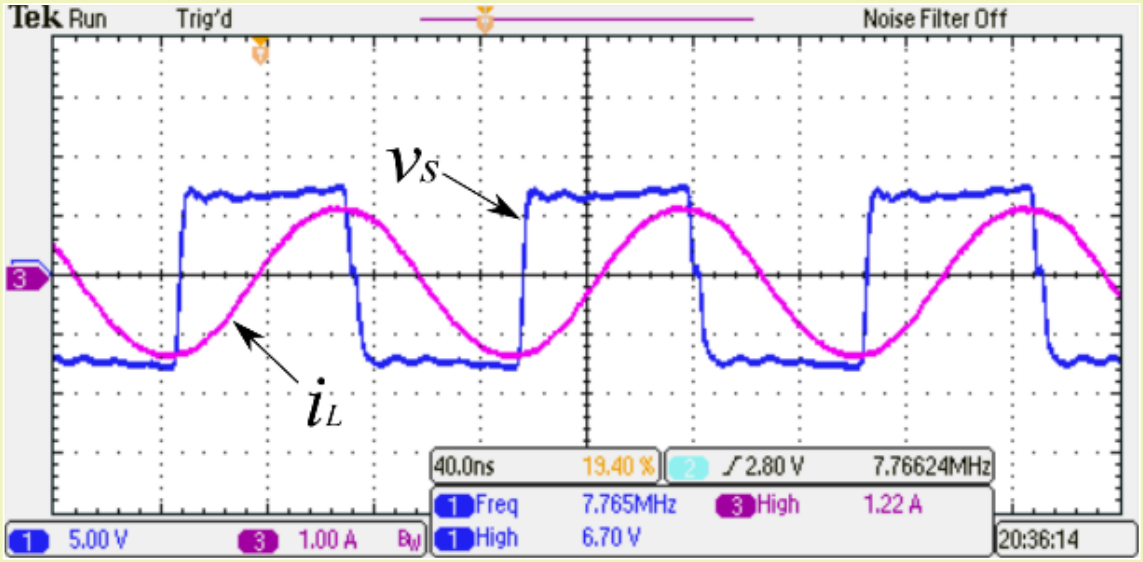

❑ SELF-OSC. FOR SINUSOIDAL GENERATION

A. Current Sensor Design

1

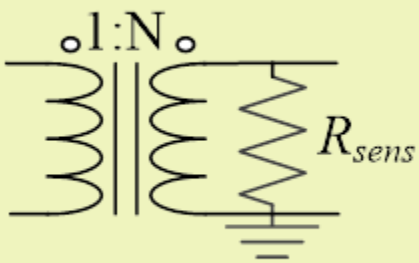

2

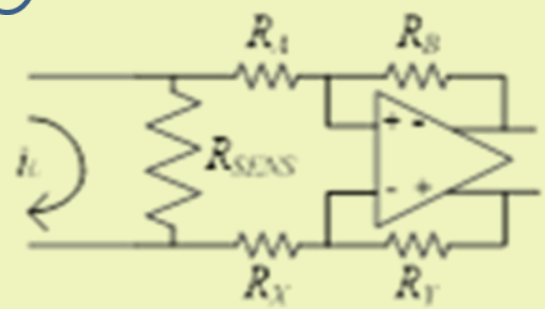

Two different sensing stages may be appropriate:

1. **Current sensing transformer.**

   It requires compensation of the parasitic effects generated between the windings by opposing the magnetic fields.

2. **Shunt resistor sensed over a high-speed differential amplifier.**

   It does not require any special procedure in order to operate at a frequency of 6.78 MHz and presents a reduced size. This technique was selected.

❑ SELF-OSC. FOR SINUSOIDAL GENERATION

B. Delay Compensation Networks

1. RL delay compensation network: phase-leading behavior

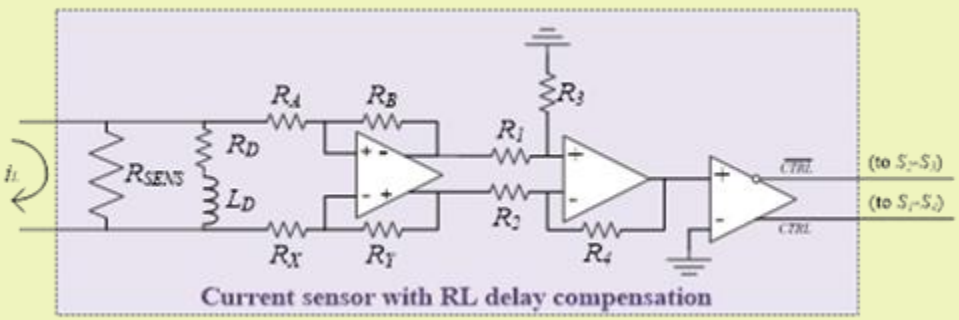

Circuit Diagram

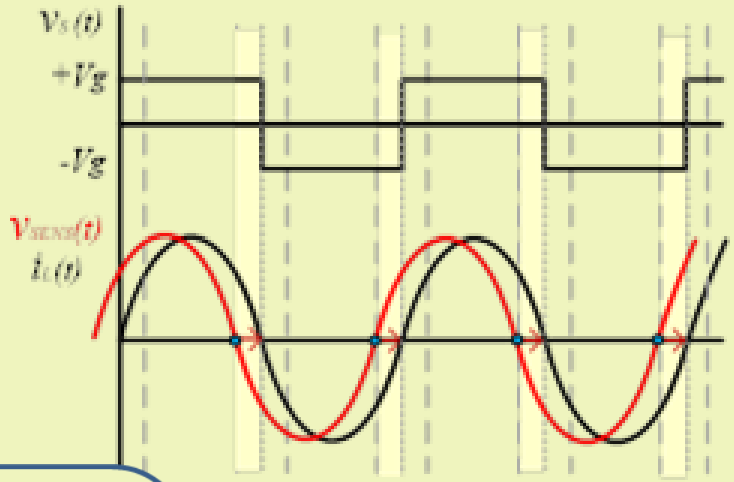

Response obtained (red)

Properties:

+ Delay compensation defined by the time constant τ $\left(\tau = \frac{L_D}{R_D}\right)$.
+ No drift in case of load changes.
+ Capable of processing high bandwidth waveforms.
- Introduces losses and it is not flexible.
- It exhibits a constant compensation, not easy to adapt for different delays in case of load changes.

❑ SELF-OSC. FOR SINUSOIDAL GENERATION

B. Delay Compensation Networks

2. Hysteresis delay compensation network: switching instants different from zero

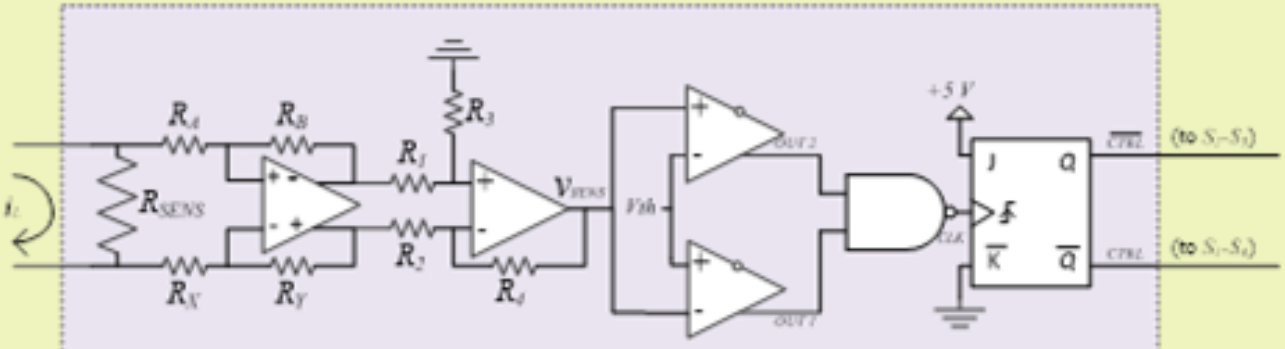

Current sensor with hysteresis delay compensation

Properties:

+ Delay compensation controlled by *Vth*.
+ High flexibility in its adjustment.
+ Low latency, accuracy and capability of compensating high delays.
+ Facilitates ZVS if an AND gate is applied (delays lower than half-cycle).
- Range of admissible loads: [37, 57] Ω.
- Requires a startup-ramp in the hysteresis level for auto-starting.

- **AND gate: can compensate only a maximum delay of half-semicycle.**
- **NAND gate: can compensate only delays between half-semicycle and a full semicycle.**

❑ SELF-OSC. FOR SINUSOIDAL GENERATION

B. Delay Compensation Networks

2. Hysteresis delay compensation network: switching instants different from zero

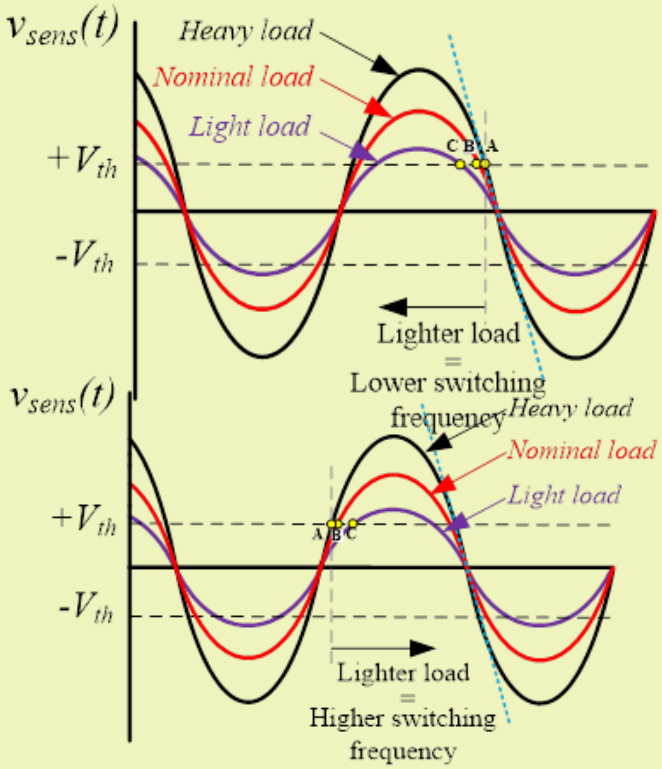

Effect of delay compensation in case of load changes

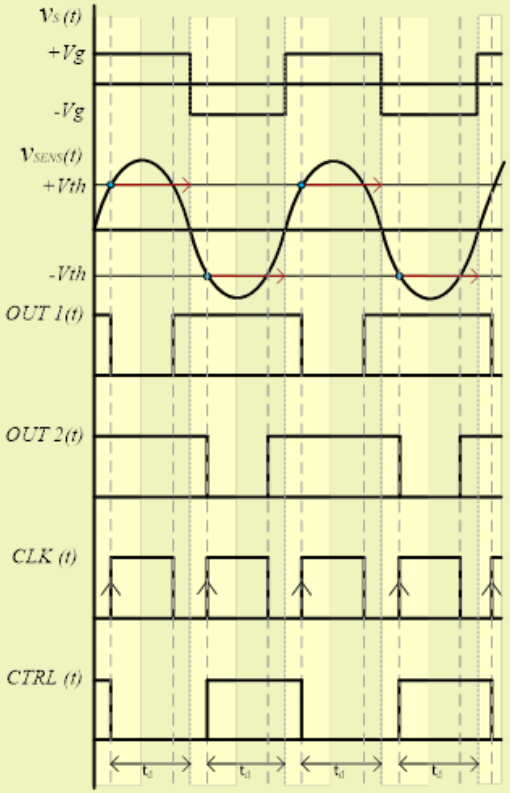

Response obtained with NAND gate (circles: switching instants)

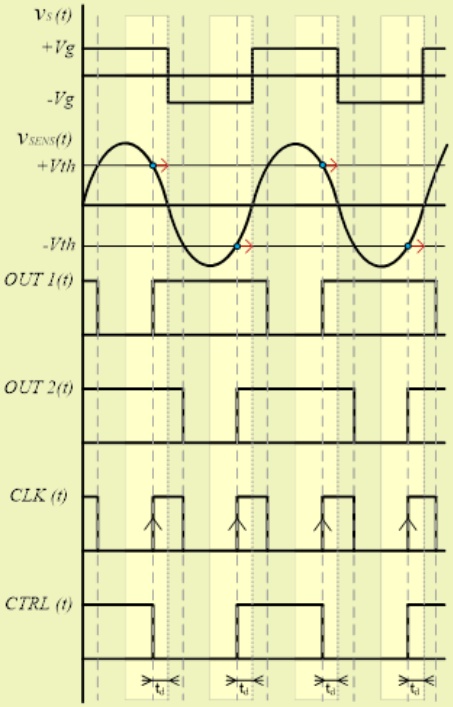

Response obtained with AND gate (circles: switching instants)

❑ SELF-OSC. FOR SINUSOIDAL GENERATION

Experimental Prototype

Circuit Diagram

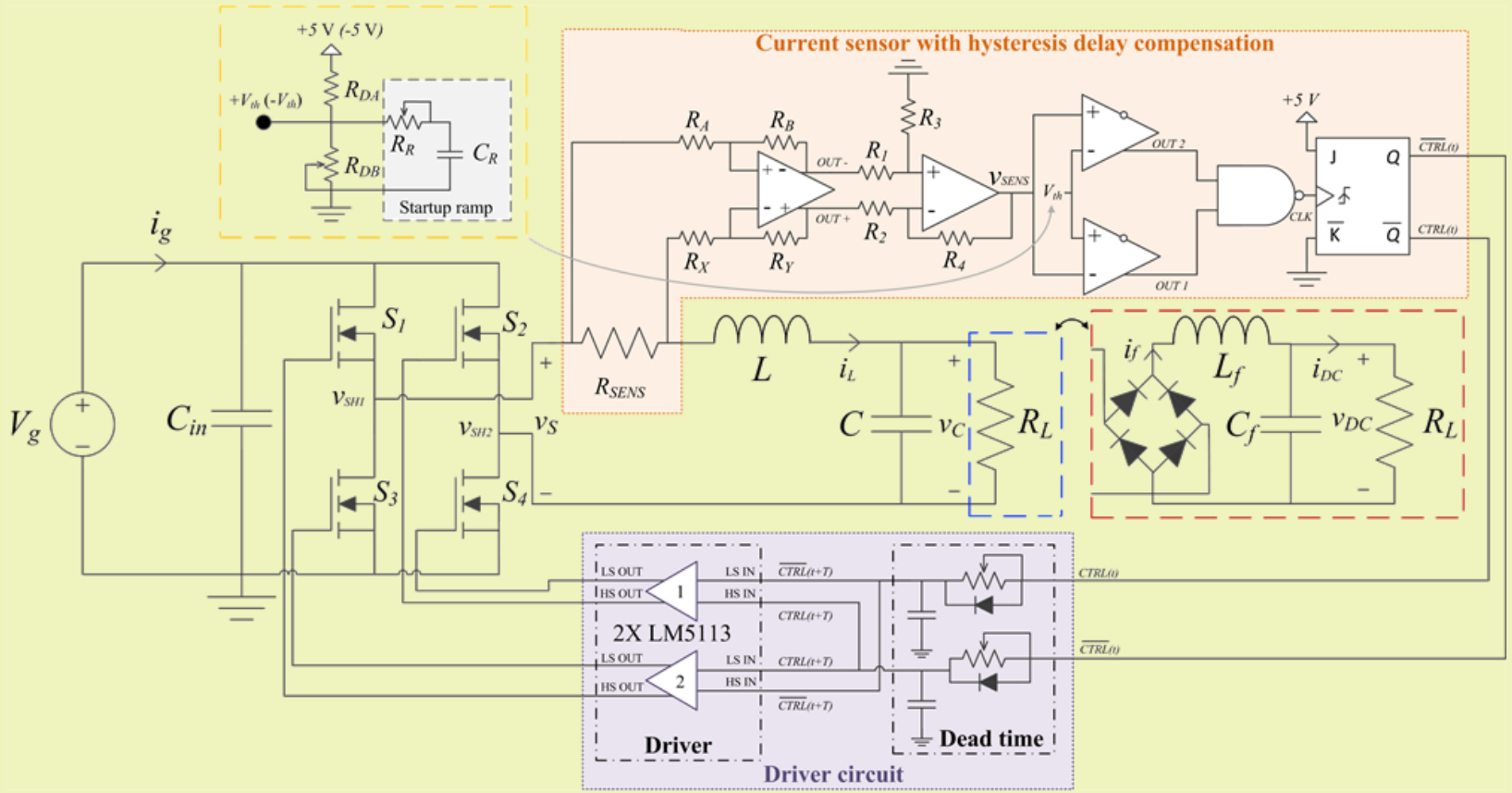

❑ SELF-OSC. FOR SINUSOIDAL GENERATION

Experimental Prototype

Detail of the GaN FET:

Summary of components	
Parameter	Code or value
L	300 nH
C	1,2 nF (C0G)
V_g	12 V
C_{in}	22.1 µF
Differential amplifier	THS 4151
eGaN FET (S_i)	**EPC 8004**
Driver	LM 5113
R_{SENS}	0.3 Ω
R_A, R_X	402 Ω
R_B, R_Y	2010 Ω
R_1, R_2, R_3, R_4	100 kΩ
R_{D4}	4 kΩ
R_{DB}, R_R	100 kΩ
C_R	250 pF
NAND gate	NC7S08
JK monostable	SN74F109DR
Comparator	LT 1116
Diodes (Rect.)	PMEG10020ELRX
L_f	1 µH
C_f	0.47 µF
R_L	57 Ω

Experimental realization of the self-oscillating resonant converter based on GaN FETs.

❑ SELF-OSC. FOR SINUSOIDAL GENERATION

Experimental Results

As Inverter

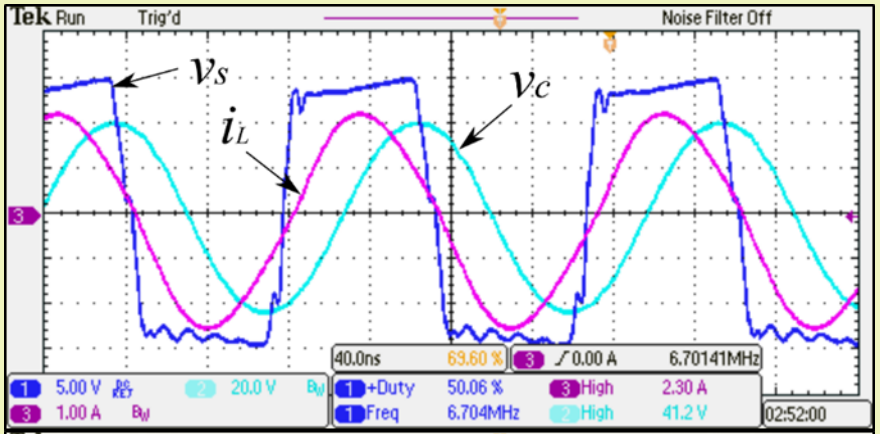

Parameter	Result
f_o	6.70 MHz
P_{out}	16 W
Efficiency	96 %

Operation in nominal conditions (near ZVS operation)

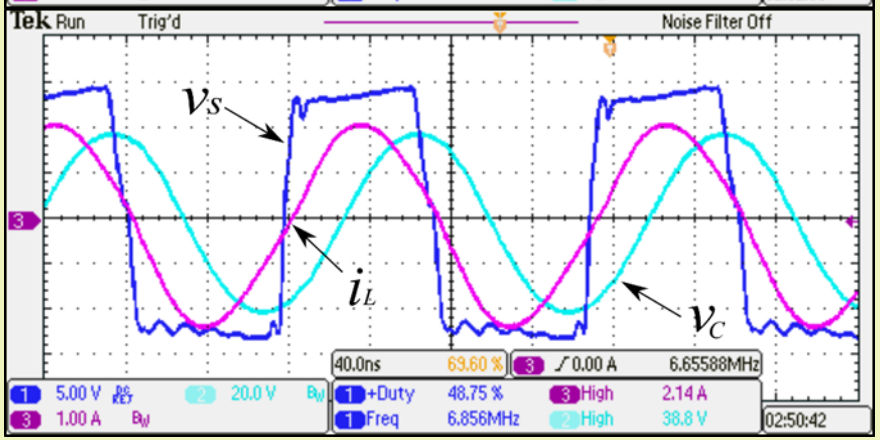

Parameter	Result
f_o	6.85 MHz
P_{out}	16 W
Efficiency	98 %

ZVS can be obtained within tolerance limits.

- **Self-oscillating response of desired amplitude and period is obtained.**
- **Fullfilment of the AirFuel Alliance Class 3 standard is verified.**

❑ SELF-OSC. FOR SINUSOIDAL GENERATION

Experimental Results

With Rectifier

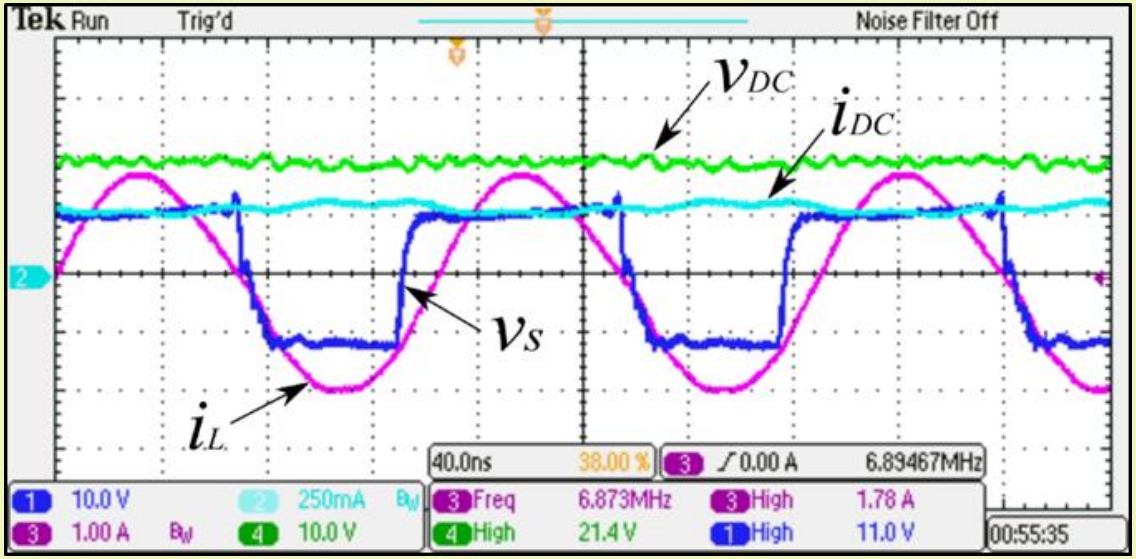

Parameter	Result
f_o	6.83 MHz
P_{out}	7 W
Efficiency	83 %

Operation as HF self-oscillating wired battery charger is validated.

❑ SELF-OSC. FOR SINUSOIDAL GENERATION

Third order resonant converters

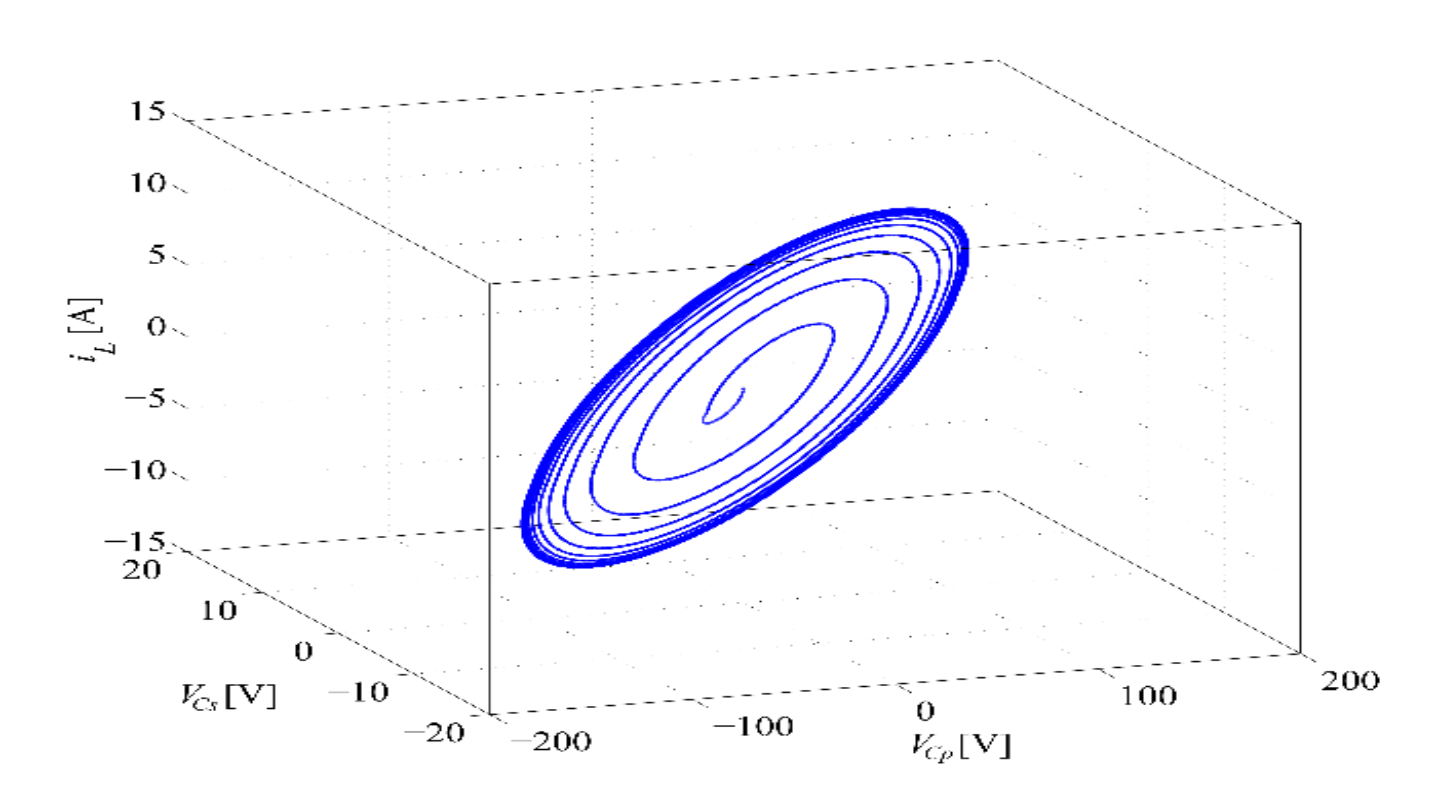

Matlab simulation of the self-oscillating mechanism in the LCC resonant converter

❑ SELF-OSC. FOR SINUSOIDAL GENERATION

Third order resonant converters

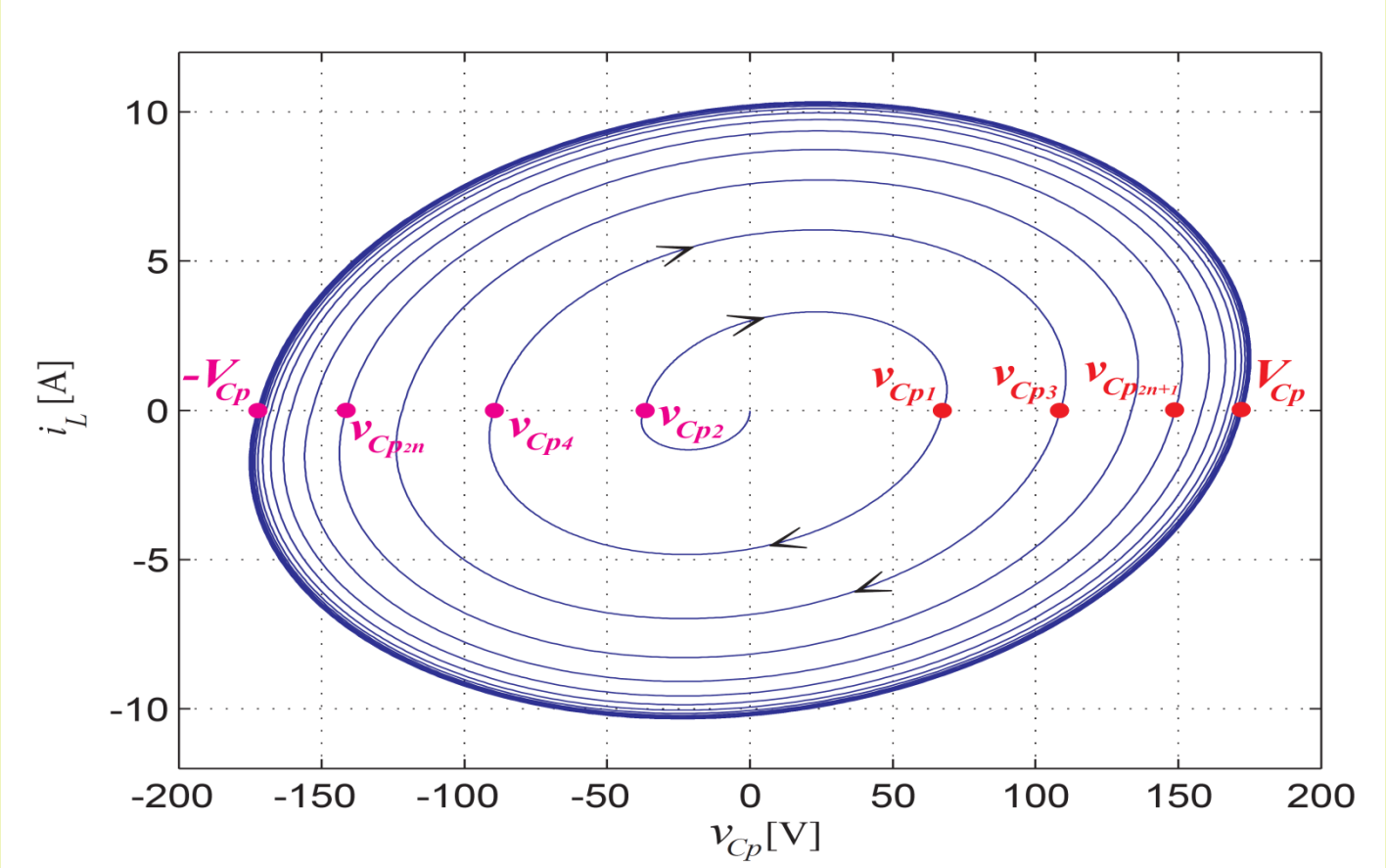

Projection in the phase – plane i_L-v_{Cp}

❑ SELF-OSC. FOR SINUSOIDAL GENERATION

Third order resonant converters

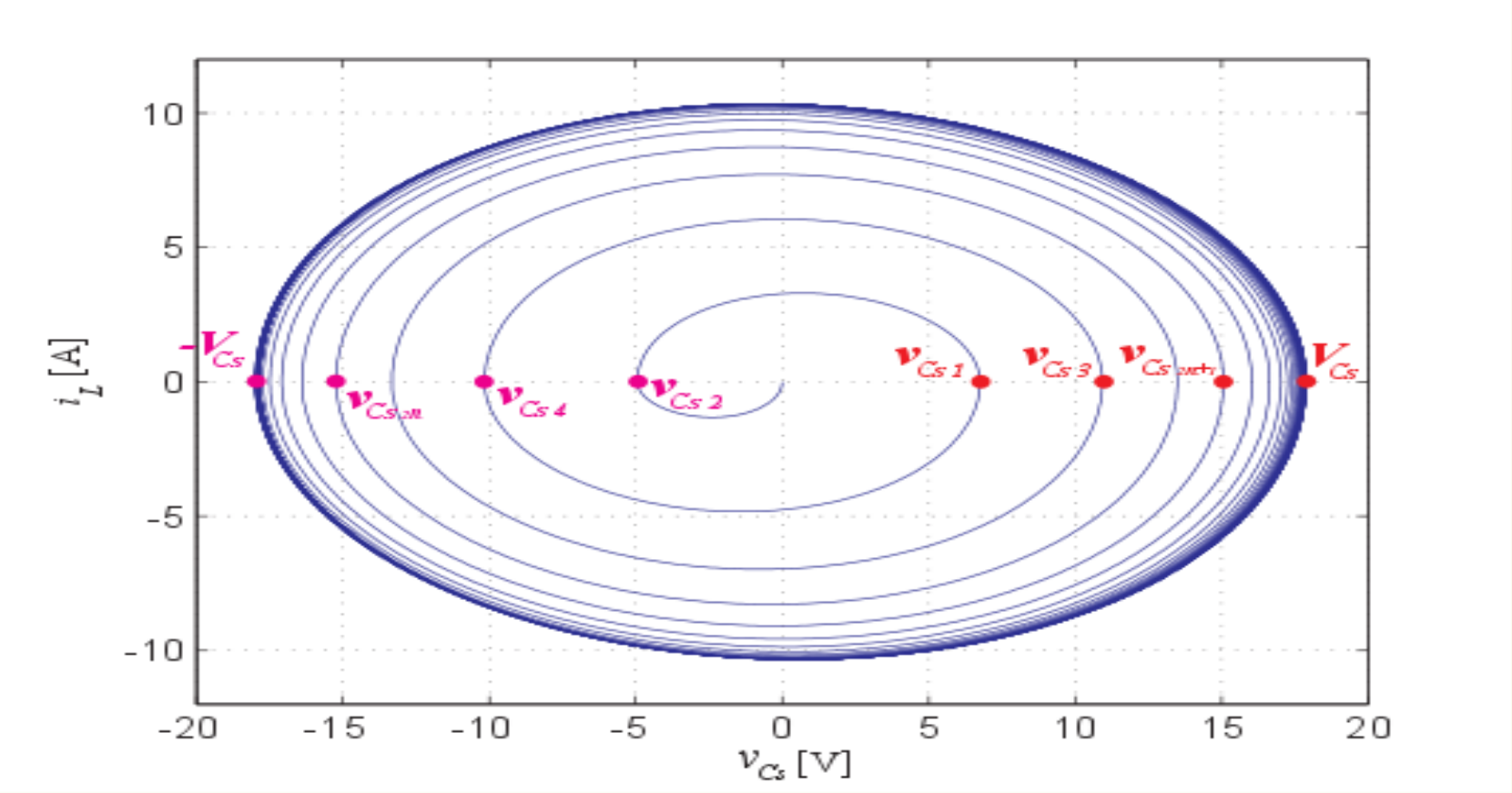

Projection in the phase-plane i_L-v_{Cs}

❑ SELF-OSC. FOR SINUSOIDAL GENERATION

Third order resonant converters

Stability analysis

i) **recurrence**

$$\begin{pmatrix} v_{Cs}(k+1) \\ v_{Cp}(k+1) \end{pmatrix} = \begin{pmatrix} \varphi_{11} & \varphi_{12} \\ \varphi_{21} & \varphi_{22} \end{pmatrix} \begin{pmatrix} v_{Cs}(k) \\ v_{Cp}(k) \end{pmatrix} + \begin{pmatrix} \gamma_1 \\ \gamma_2 \end{pmatrix} V_g$$

ii) **Characteristic equation**

$$Q(\lambda) = \lambda^2 + b\lambda + c$$

$$b = \frac{-K_c^2 + 2K_c + 2 + 2K_c\, e^{-\xi\pi} - (K_c + 2)^2\, e^{-2\xi\pi}}{(1 + K_c)^2} \qquad c = \frac{(1 - K_c\, e^{-\xi\pi})^2}{(1 + K_c)^2} \qquad K_c = \frac{C_s}{C_p}$$

The system is stable because the eigenvalues are always located within the unit circle

❑ SELF-OSC. FOR SINUSOIDAL GENERATION

Third order resonant converters

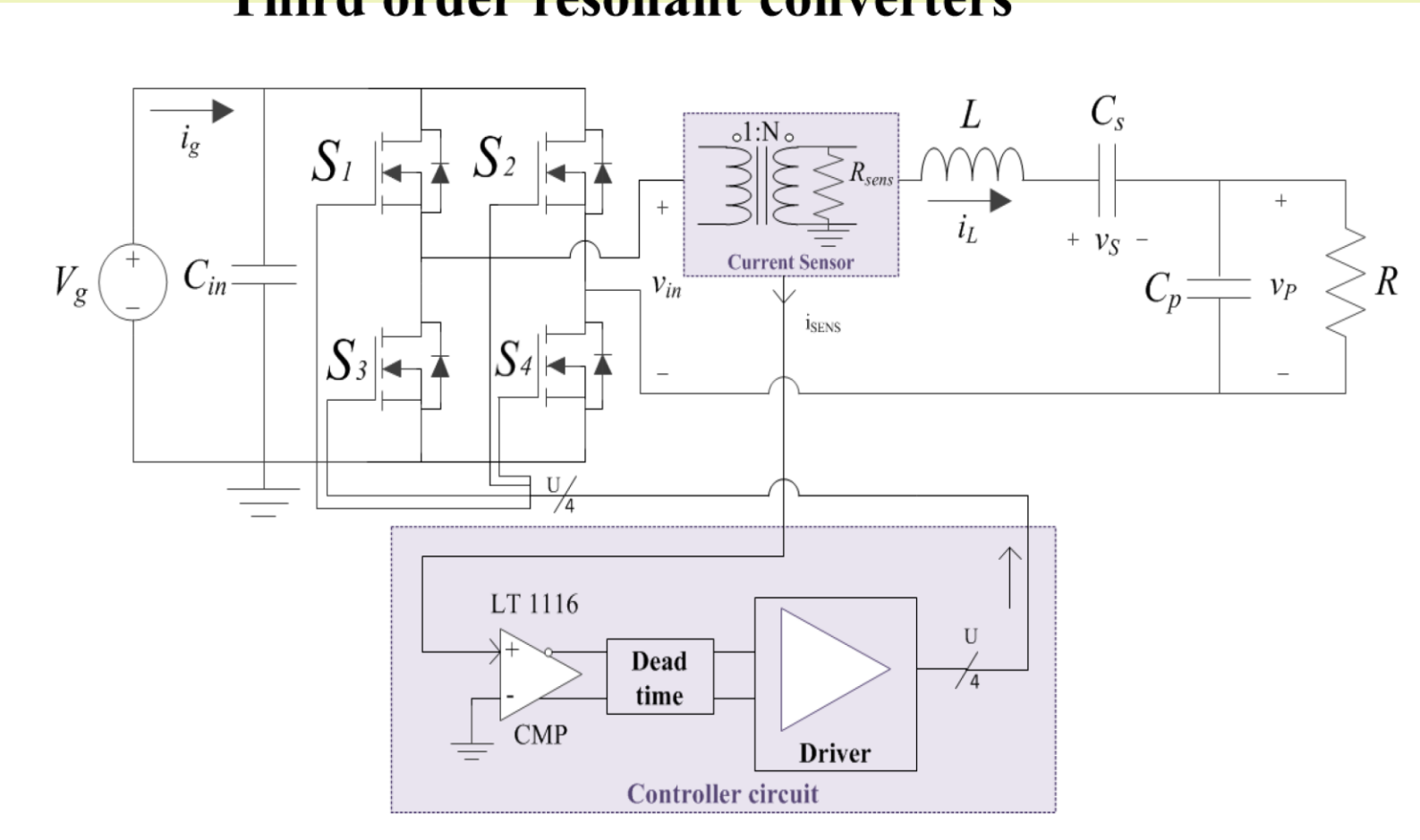

Circuit scheme of the implemented self-oscillating LCC converter.

SELF-OSC. FOR SINUSOIDAL GENERATION

Third order resonant converters

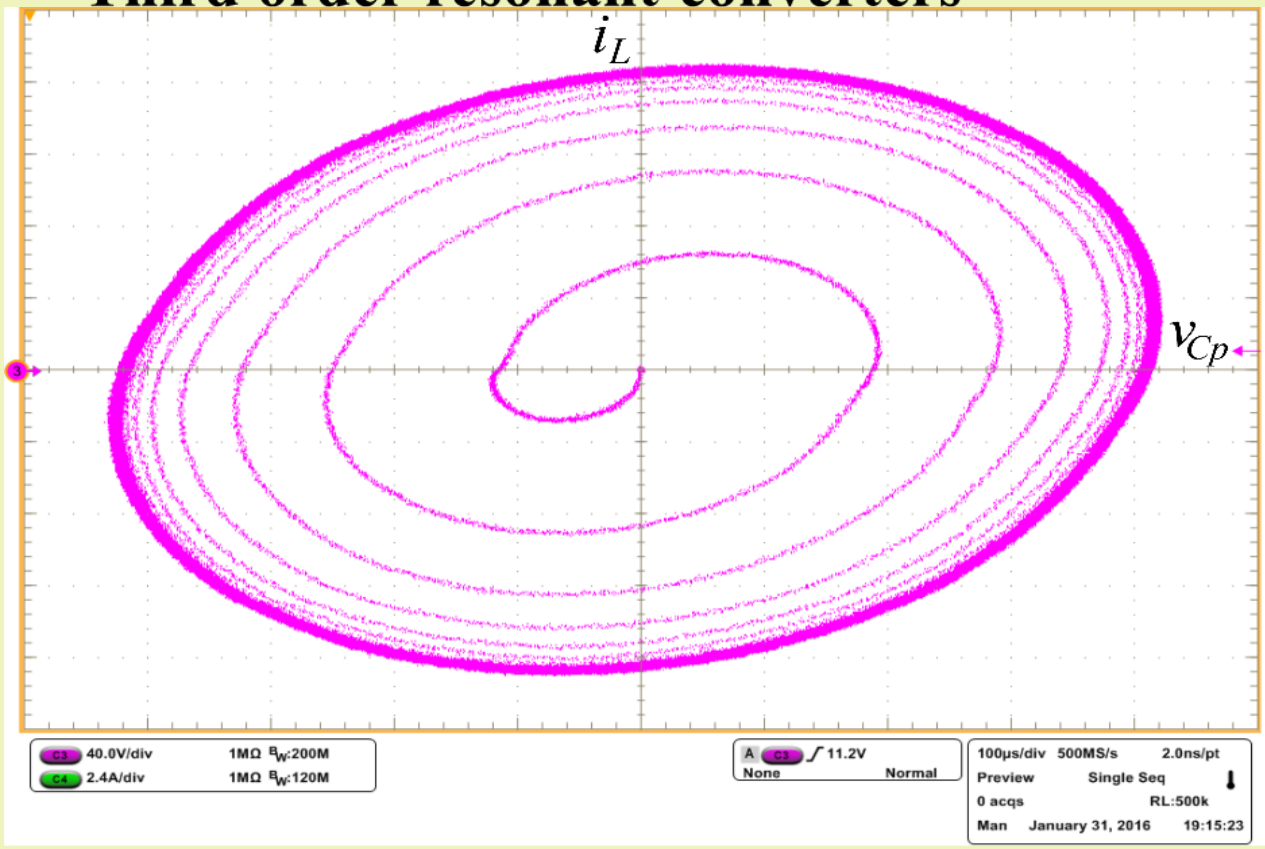

Experimental limit-cycle generation in the phase-plane v_{Cp}–i_L of the self-oscillating LCC converter

❑ SELF-OSC. FOR SINUSOIDAL GENERATION

Example: LCC self-oscillating ballast for IEFL lamps

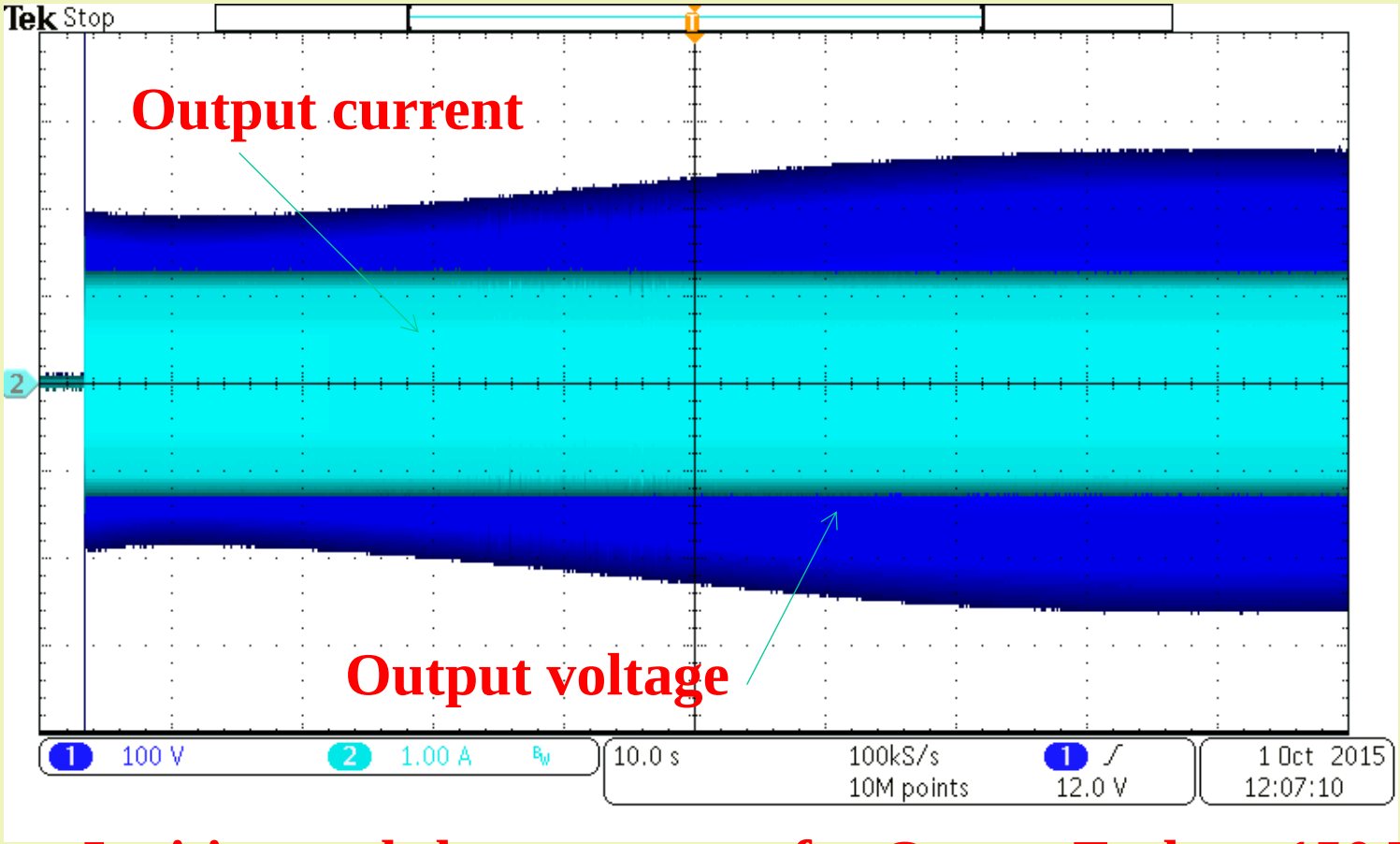

Ignition and slow warm-up for Osram Endura 150 W

❑ SELF-OSC. FOR SINUSOIDAL GENERATION

Example: LCC self-oscillating ballast for IEFL lamps

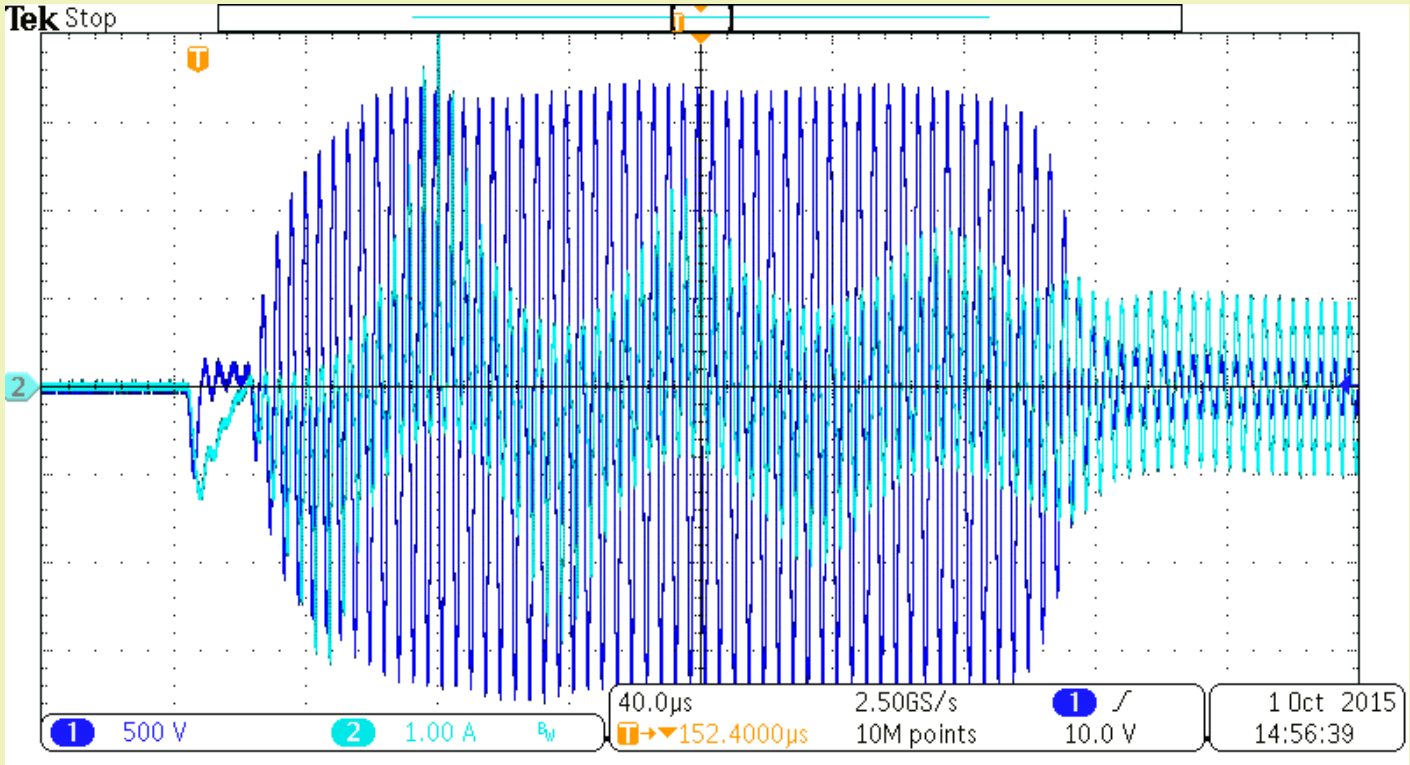

Ignition detail for Osram Endura 150 W

❑ SELF-OSC. FOR SINUSOIDAL GENERATION

Example: LCC self-oscillating ballast for IEFL lamps

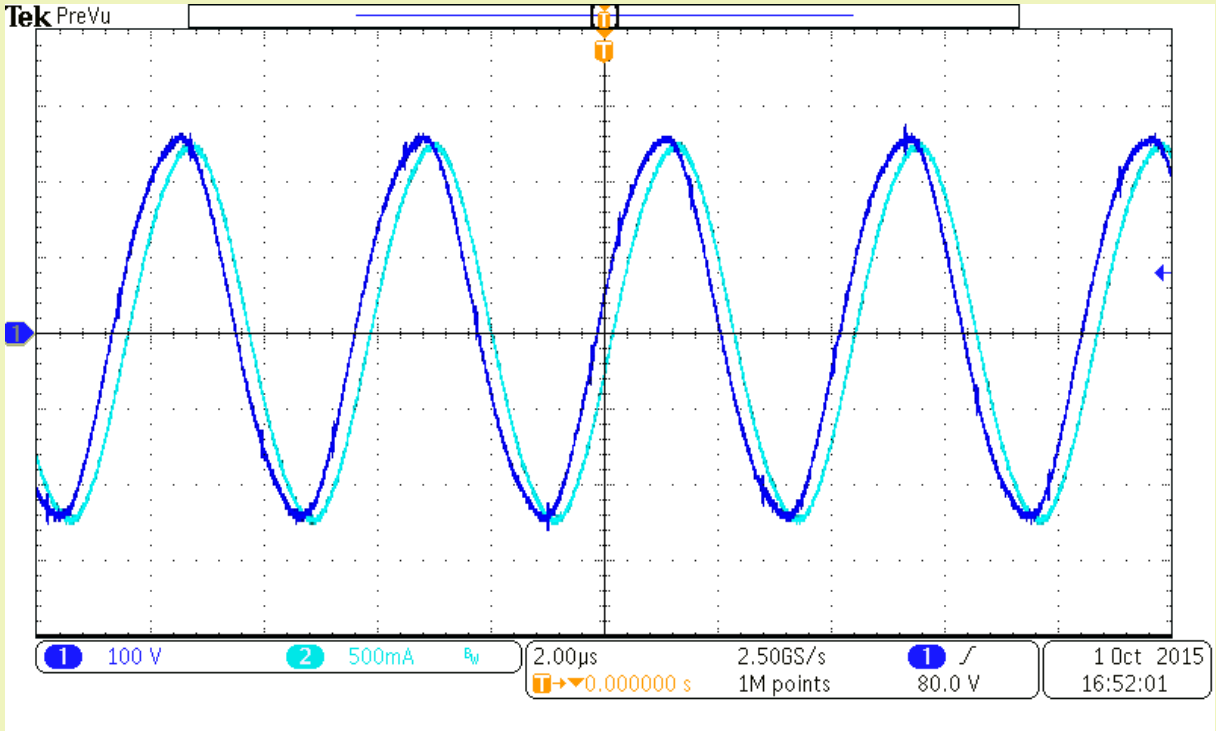

Steady-state waveforms for Osram Endura 150W

❑ SELF-OSC. FOR SINUSOIDAL GENERATION

Fourth order resonant converters

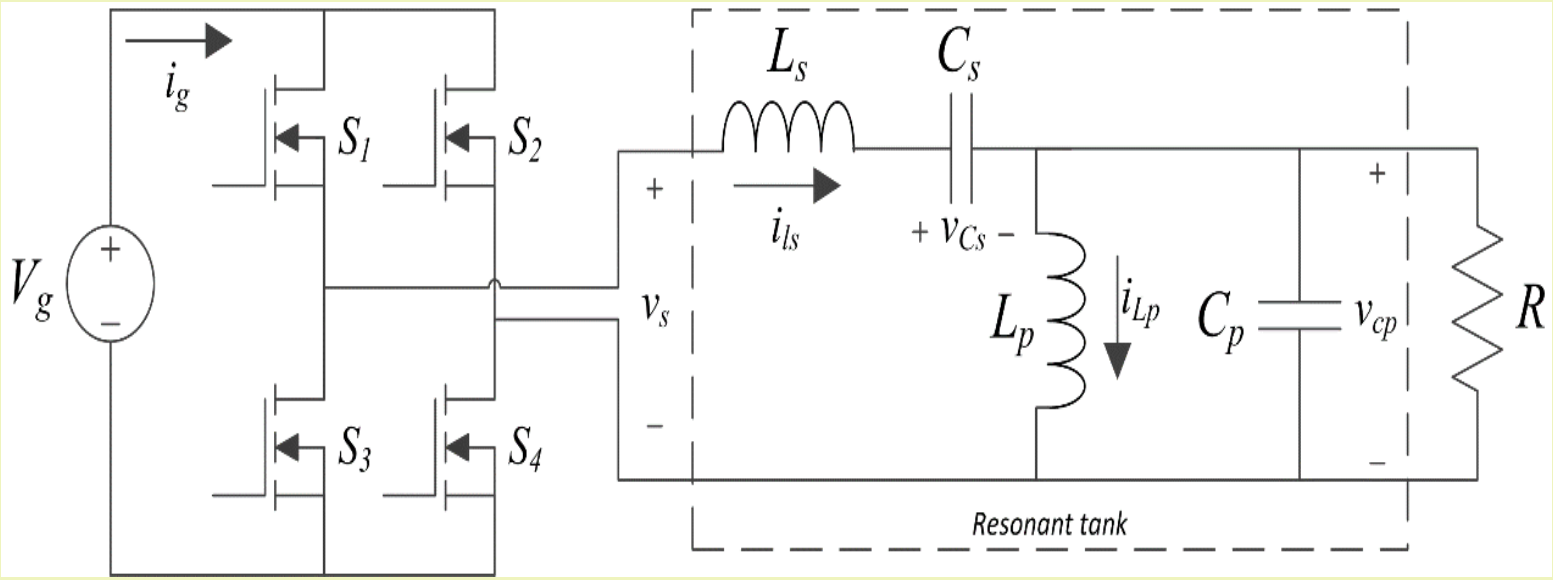

Power stage of a LCLC resonant converter.

❑ SELF-OSC. FOR SINUSOIDAL GENERATION

Fourth order resonant converters

The transient-state associated to each pole position is used as a conjecture to predict which poles will be determinant in the generation of the limit cycle.

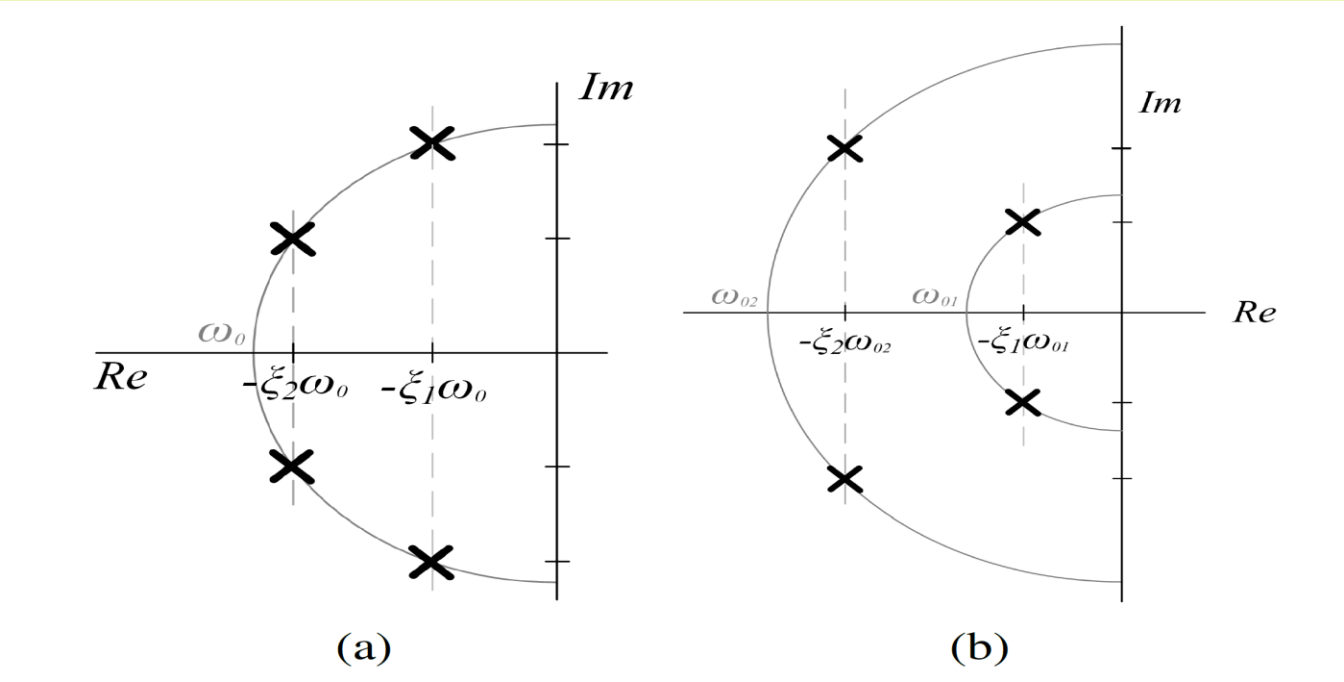

Pole-zero diagram of the proposed LCLC converter with:
(a) ω02=ω01=ω0, (b) ω02>>ω01.

❑ SELF-OSC. FOR SINUSOIDAL GENERATION

Fourth order resonant converters

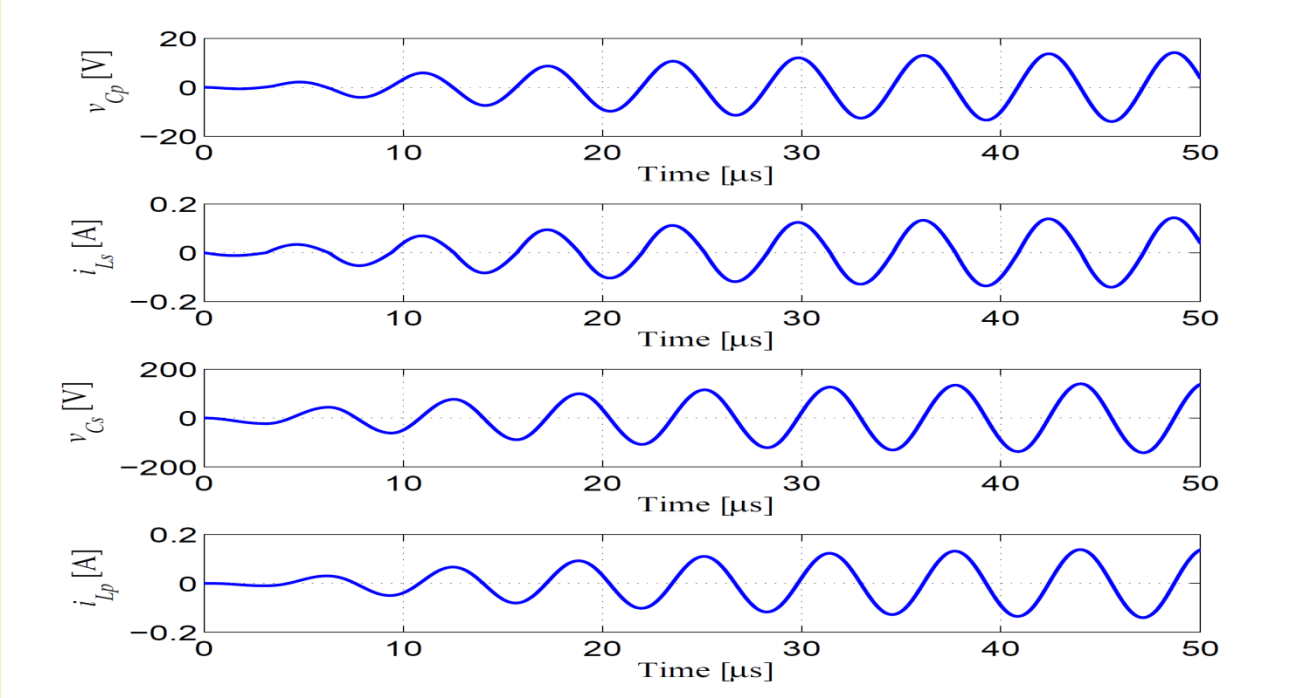

Time-domain waveforms of a step-down LCLC with Vg=12 V
f0=160 kHz, κ=10, R=100 Ω, Ls=1 mH, Lp=0.1 mH, Cs=1 nF, Cp=10 nF

❑ SELF-OSC. FOR SINUSOIDAL GENERATION

Fourth order resonant converters

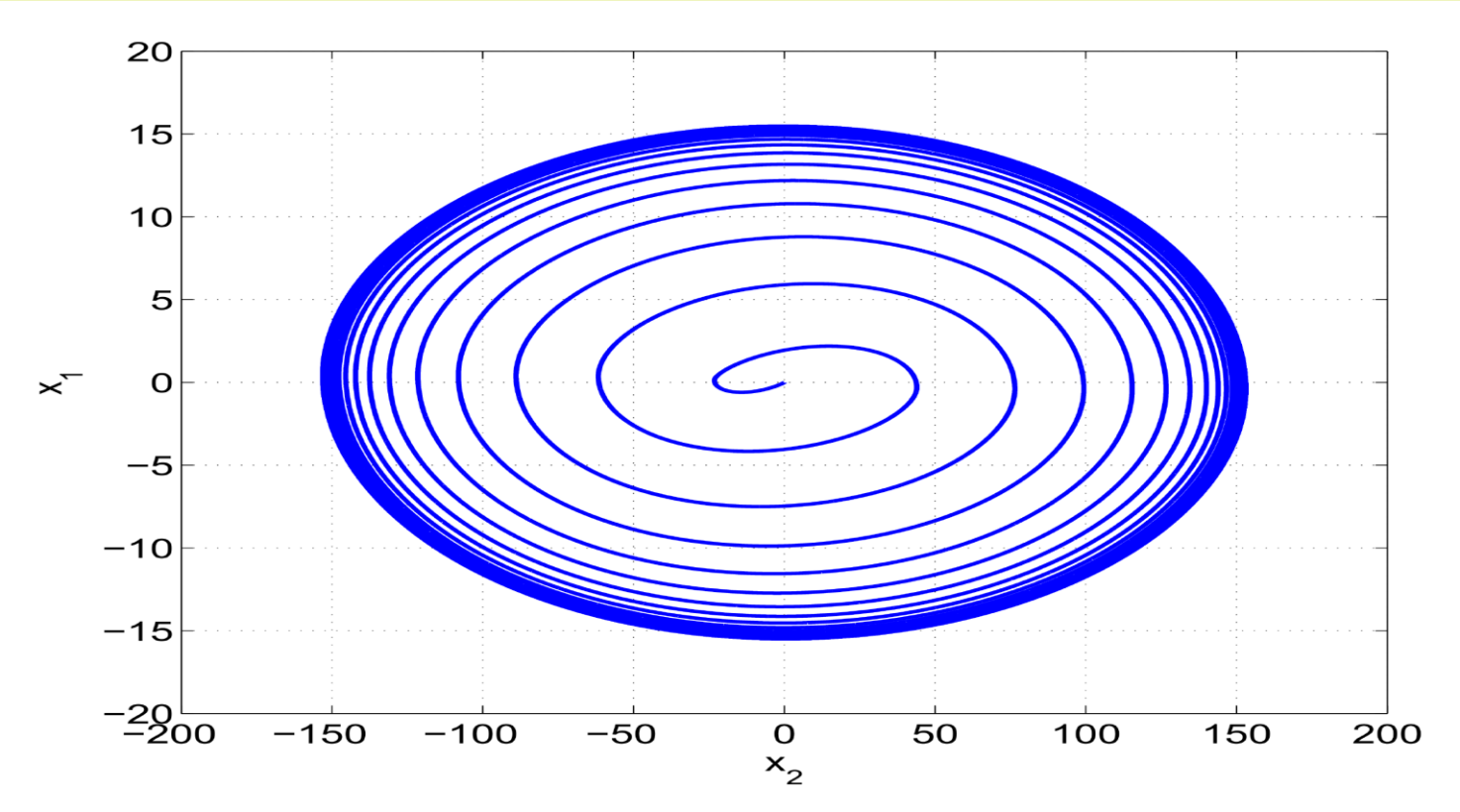

Simulated compacted representation of the limit cycle generation in the SRC-like LCLC converter .

❑ SELF-OSC. FOR SINUSOIDAL GENERATION

Fourth order resonant converters

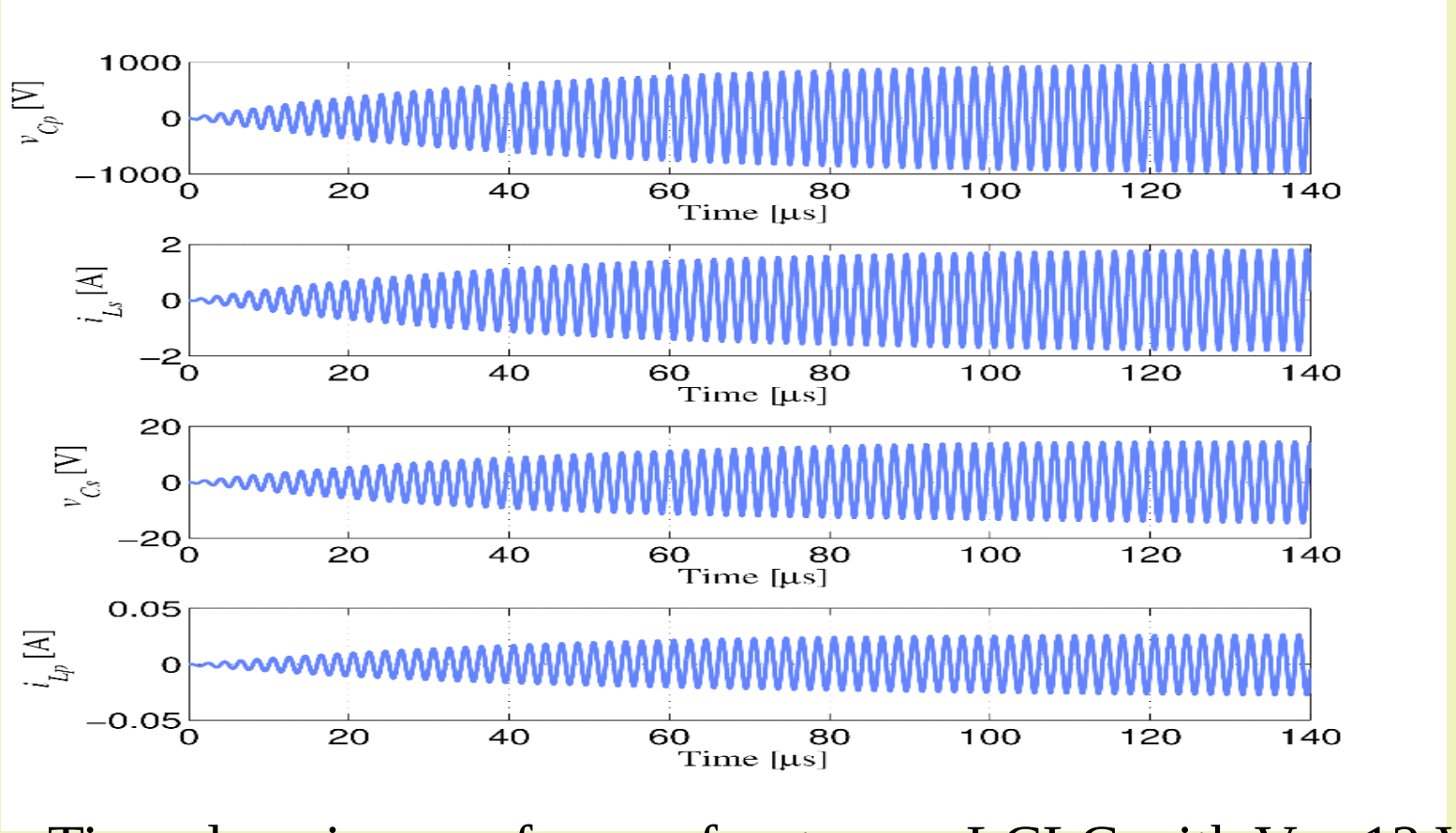

Time-domain waveforms of a step-up LCLC with Vg=12 V, f0=500 kHz, Kl=66 and R=36 kΩ.

❑ SELF-OSC. FOR SINUSOIDAL GENERATION

Self-oscillating low-frequency sinusoidal generation

R.Álvarez-López " A sliding mode control- based self-oscillating inverter using FPGA " GAEI Internal Raport , May 2018

❑ SELF-OSC. FOR SINUSOIDAL GENERATION

SELF-OSCILLATING LOW- FREQUENCY SINUSOIDAL GENERATION

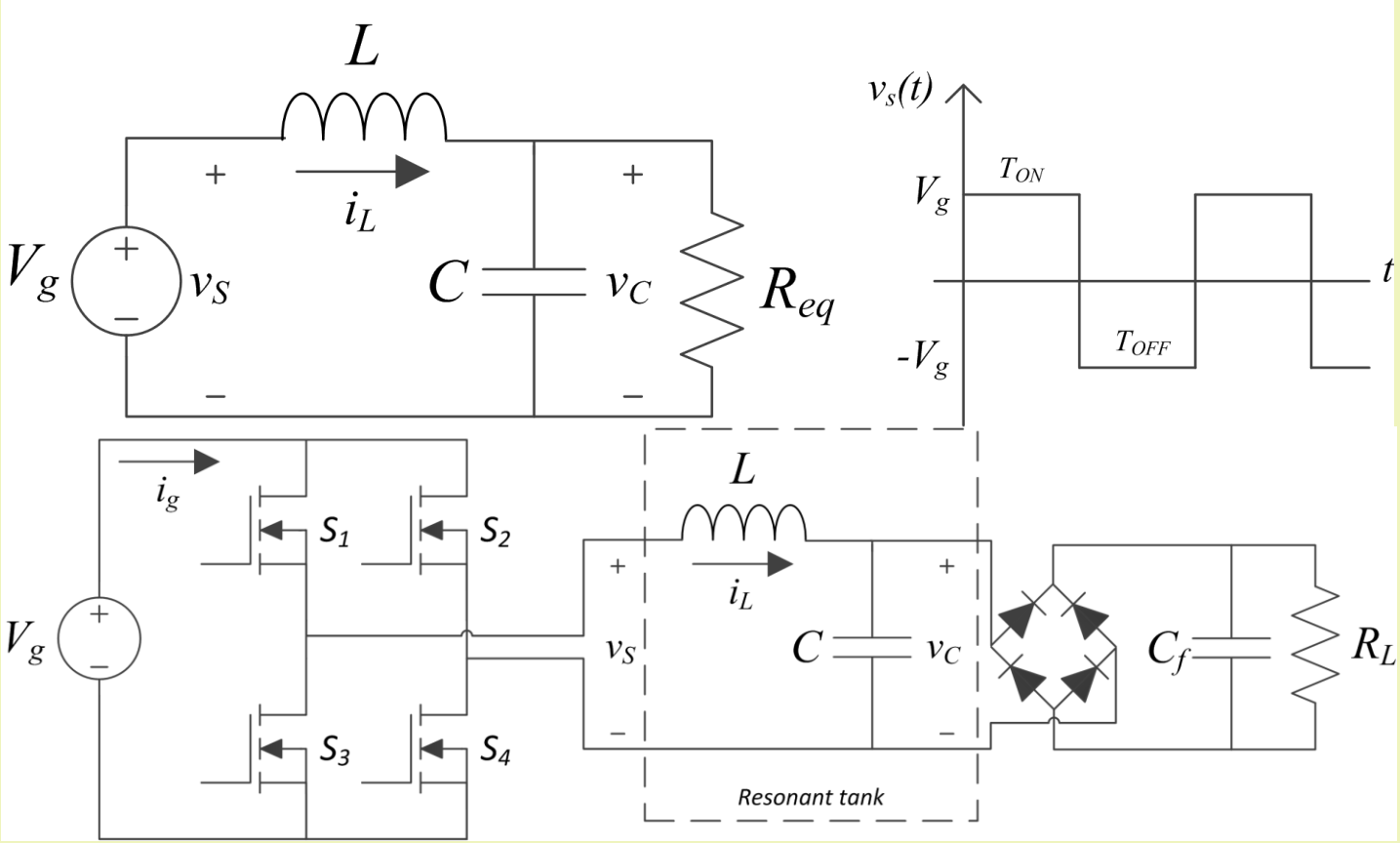

How can we generate low-frequency sinusoidal oscillations without an external reference ?

❑ SELF-OSC. FOR SINUSOIDAL GENERATION

SELF-OSCILLATING LOW- FREQUENCY SINUSOIDAL GENERATION

Power stage equations

$$i_L = i_C + i_R = C\frac{dv_C}{dt} + \frac{1}{R}v_C$$

$$L\frac{di_L}{dt} + v_C = v_g u$$

$$LC\frac{d^2 v_C}{dt^2} + \frac{L}{R}\frac{dv_C}{dt} + v_C = v_g u$$

Control signal

$$u = \{-1, 1\}$$

❑ SELF-OSC. FOR SINUSOIDAL GENERATION

SELF-OSCILLATING LOW- FREQUENCY SINUSOIDAL GENERATION

Switching surface

$$S(x) = \frac{(\frac{dv_c}{dt})^2}{\omega} + \omega v_c - \omega A^2$$

Control signal

$$u = -sgn(S\frac{dv_c}{dt})$$

Conditions for existence of sliding-mode

$$S\frac{dS}{dt} < 0 \quad \Rightarrow \quad \begin{cases} \frac{1}{LC} \gg \omega^2 \\ v_g > A + LwA/R \end{cases}$$

❑ SELF-OSC. FOR SINUSOIDAL GENERATION

SELF-OSCILLATING LOW- FREQUENCY SINUSOIDAL GENERATION

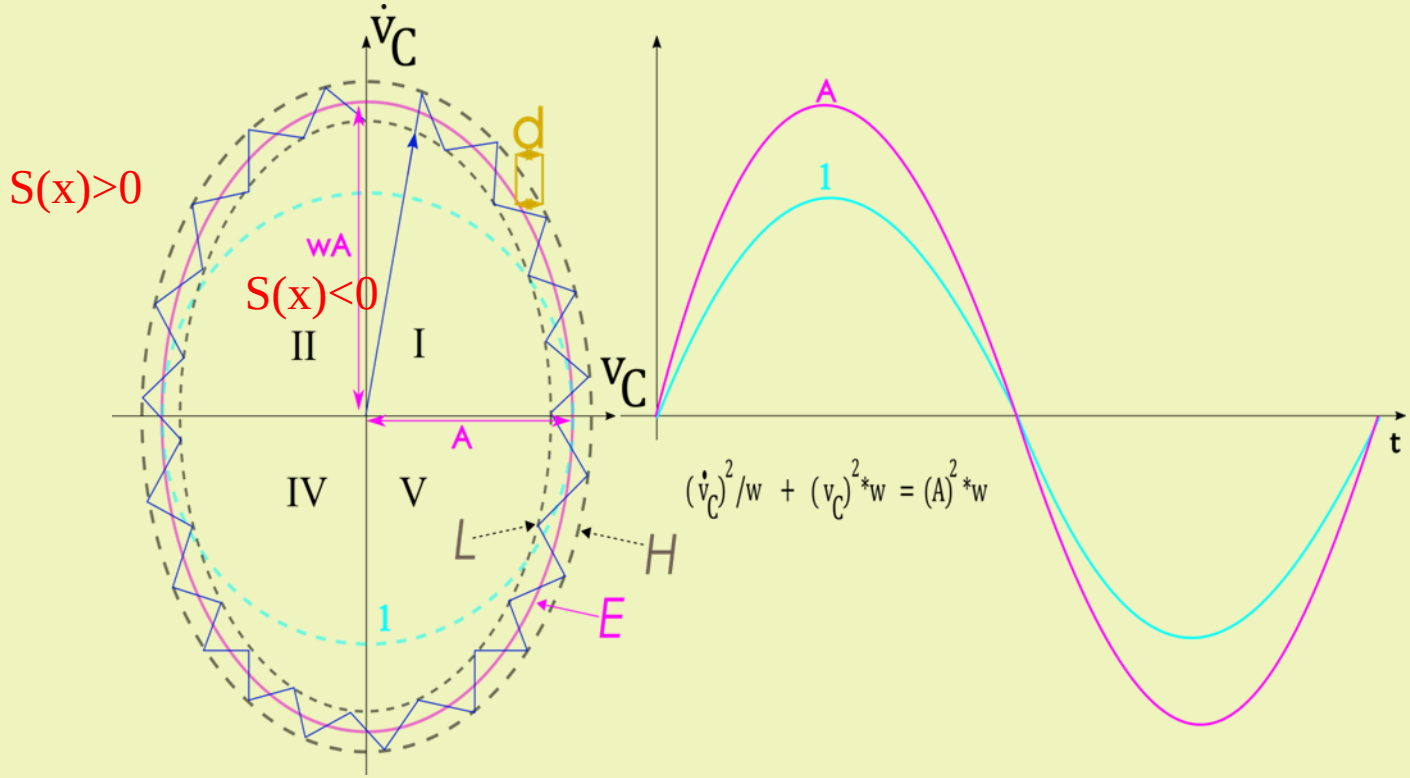

$S(x) = 0$ ➡ $v_c(t) = A sin\omega t$

❑ SELF-OSC. FOR SINUSOIDAL GENERATION

SELF-OSCILLATING LOW- FREQUENCY SINUSOIDAL GENERATION

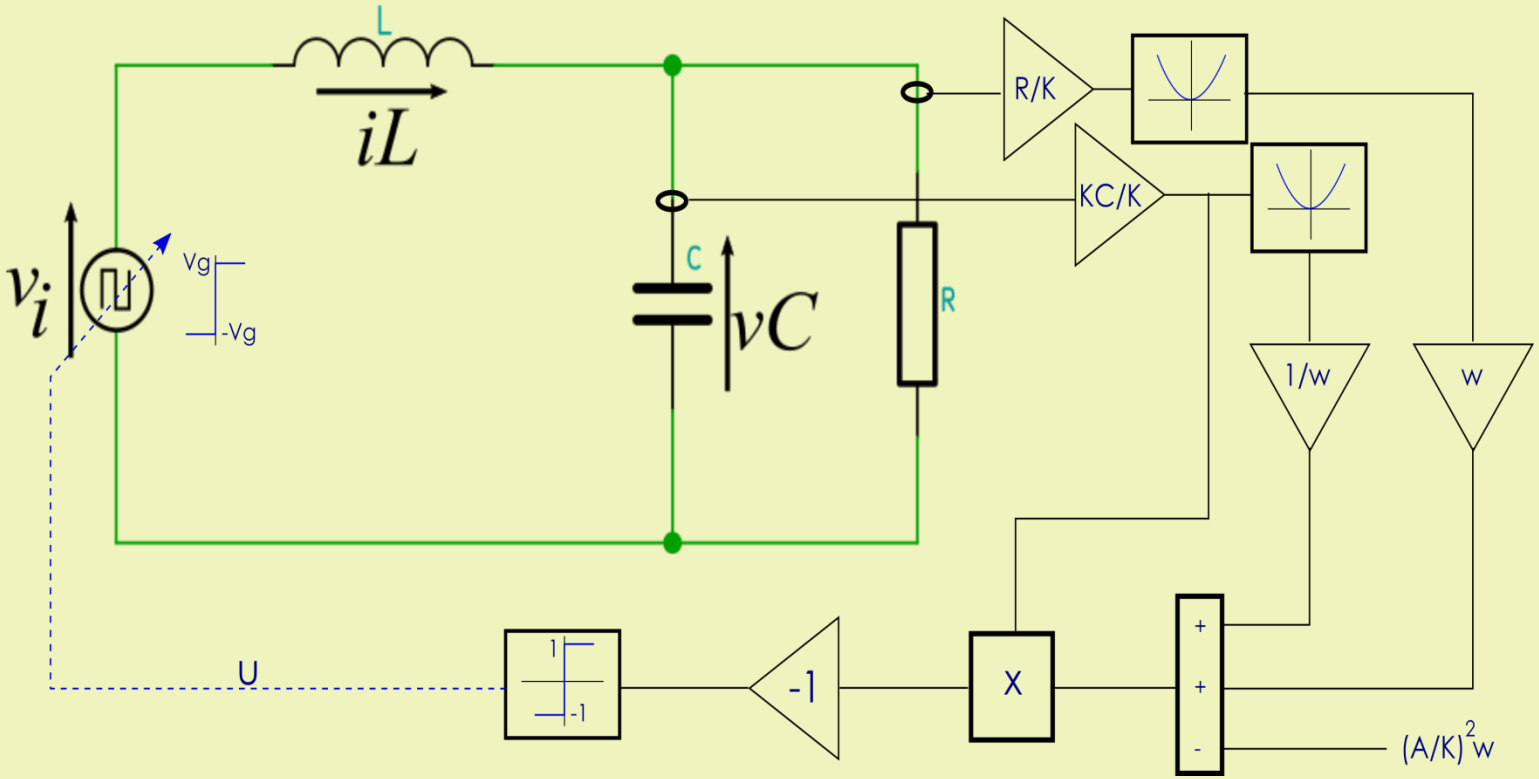

Block diagram of the SM-based sinusoidal inverter

❑ SELF-OSC. FOR SINUSOIDAL GENERATION

SELF-OSCILLATING LOW- FREQUENCY SINUSOIDAL GENERATION

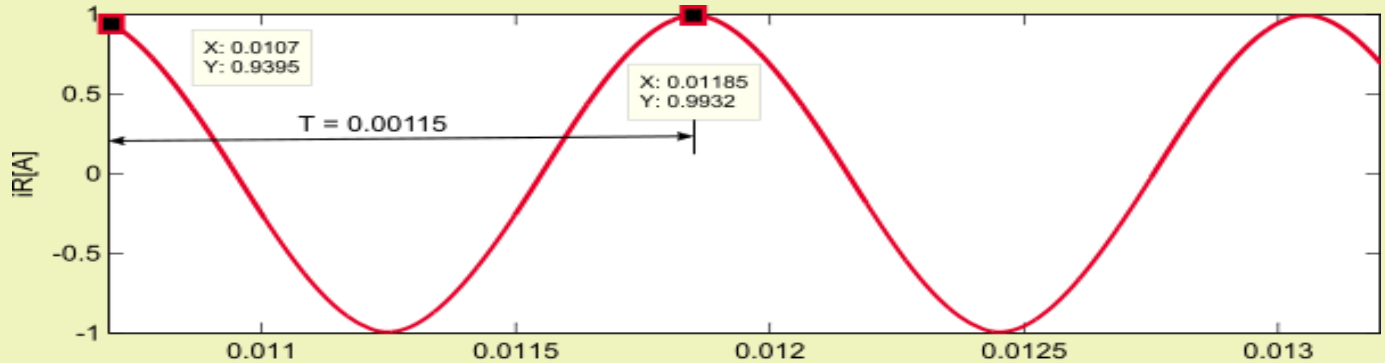

PSIM Simulation

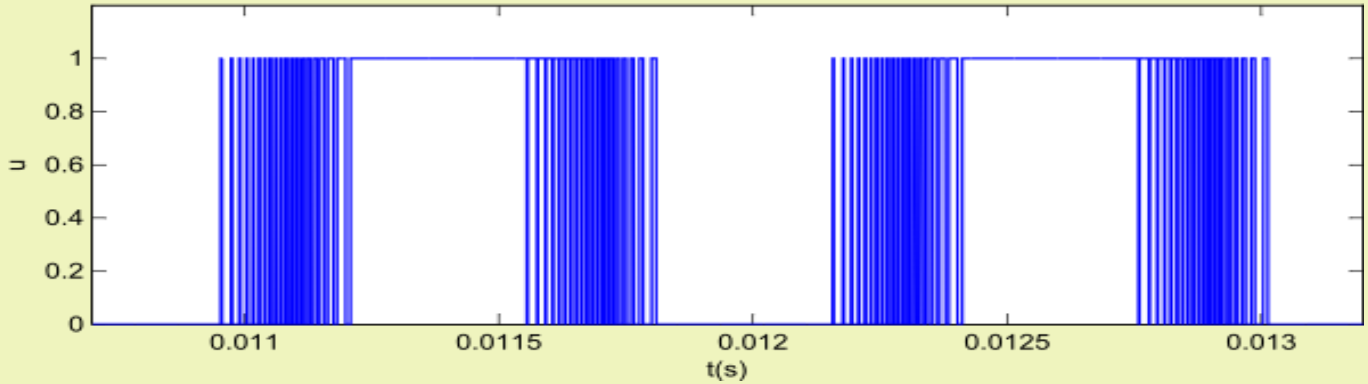

860 Hz sinusoidal waveform delivering 100 W

❑ SELF-OSC. FOR SINUSOIDAL GENERATION

SELF-OSCILLATING LOW- FREQUENCY SINUSOIDAL GENERATION

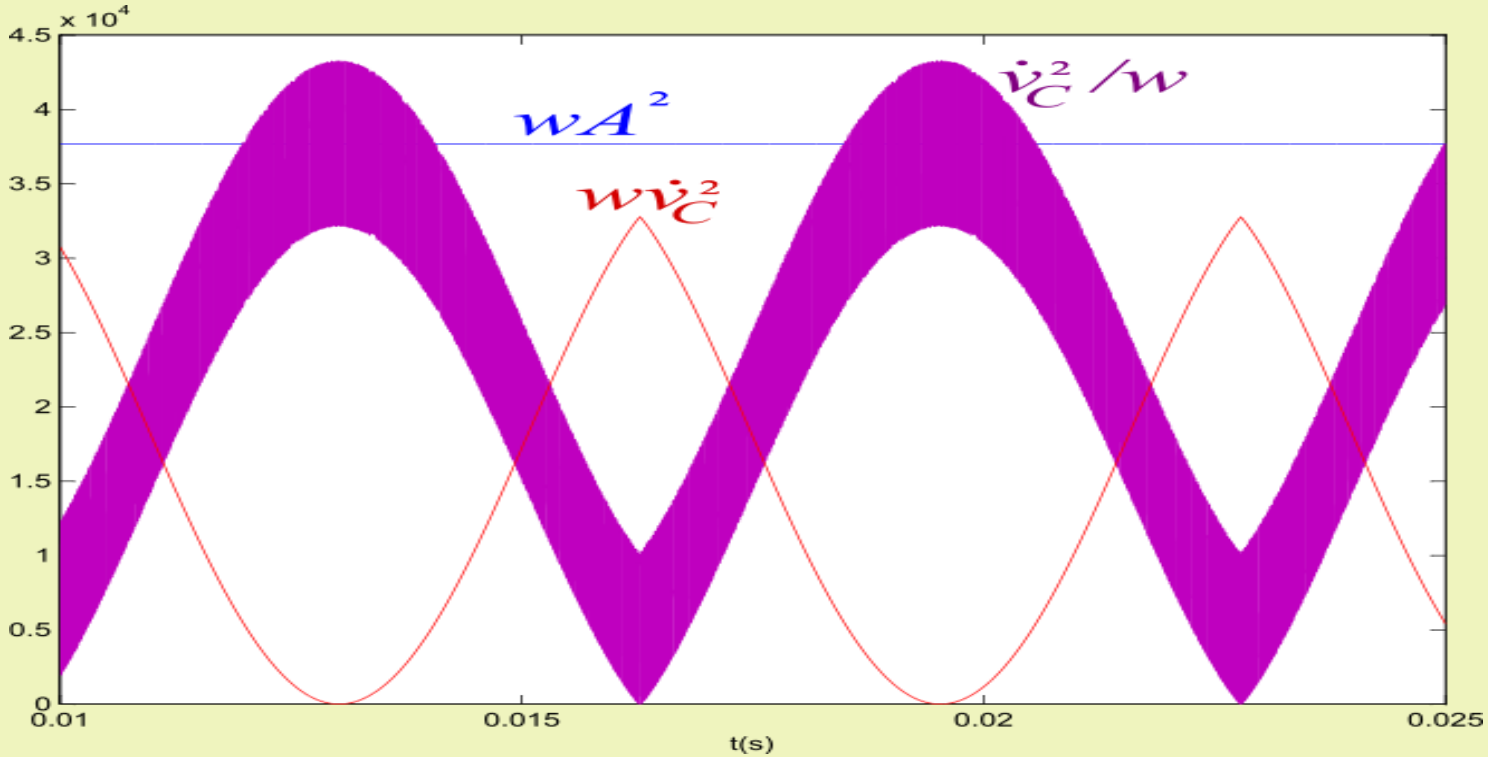

It is not possible to use an electric signal for the square of the derivative in a real prototype → **FPGA can be used**

❑ SELF-OSC. FOR SINUSOIDAL GENERATION

SELF-OSCILLATING LOW- FREQUENCY SINUSOIDAL GENERATION

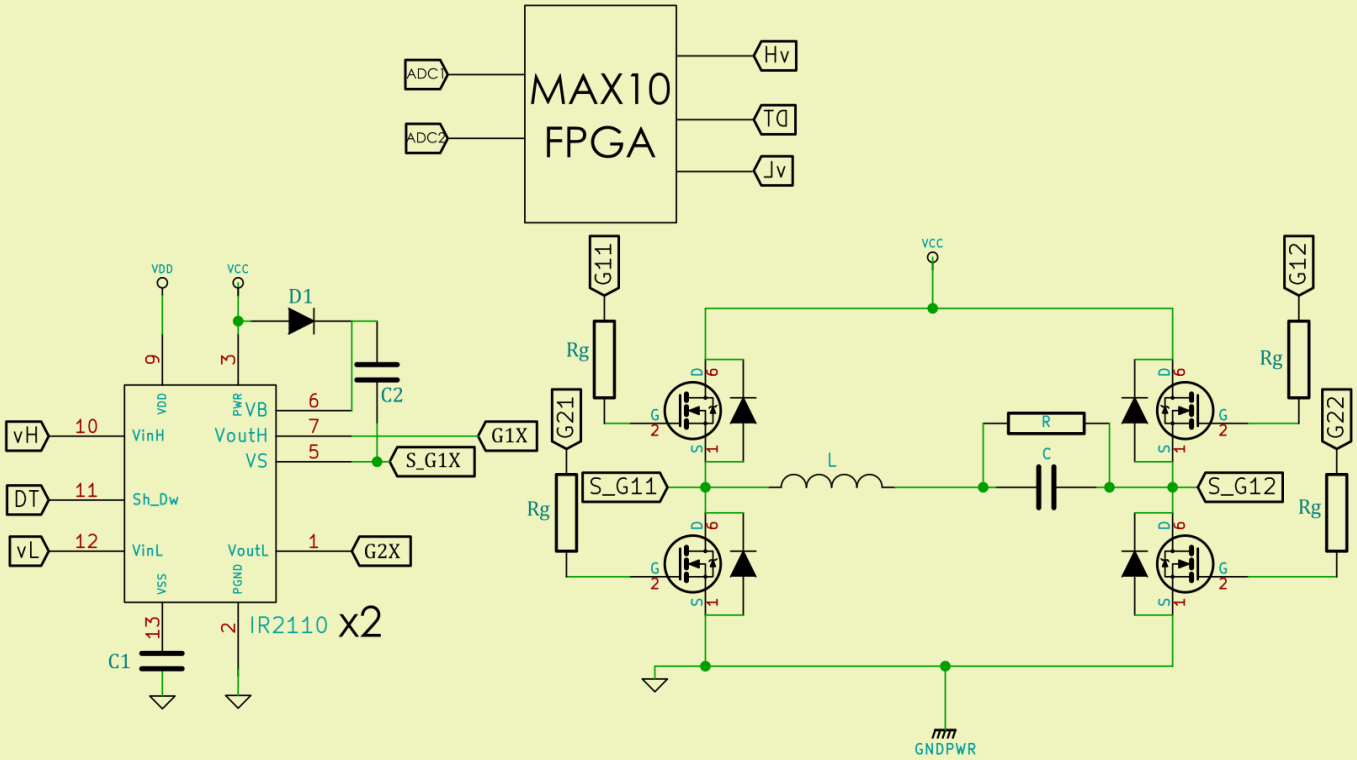

Circuit scheme

❑ SELF-OSC. FOR SINUSOIDAL GENERATION

Digital design of the control strategy

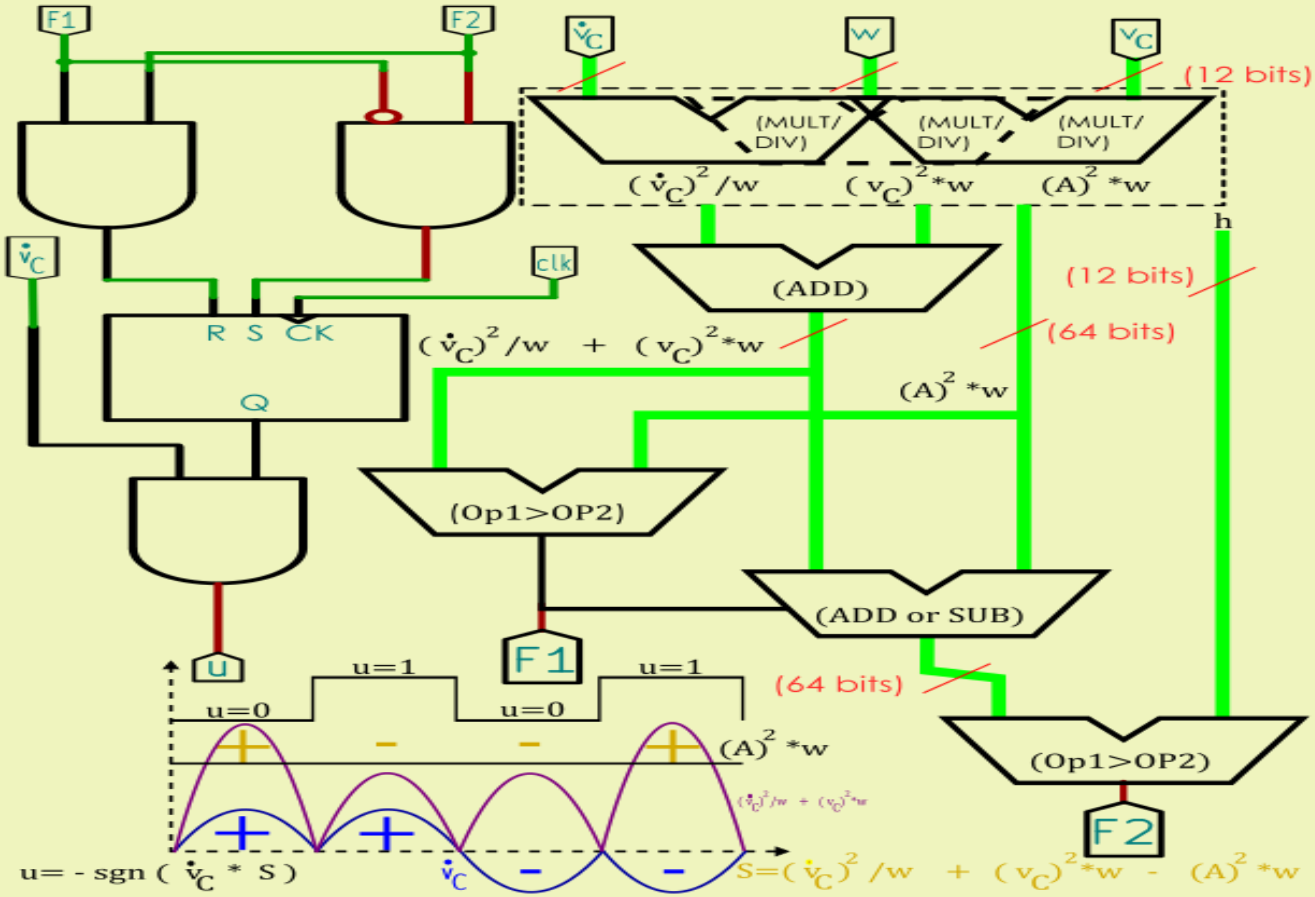

❑ SELF-OSC. FOR SINUSOIDAL GENERATION

SELF-OSCILLATING LOW- FREQUENCY SINUSOIDAL GENERATION

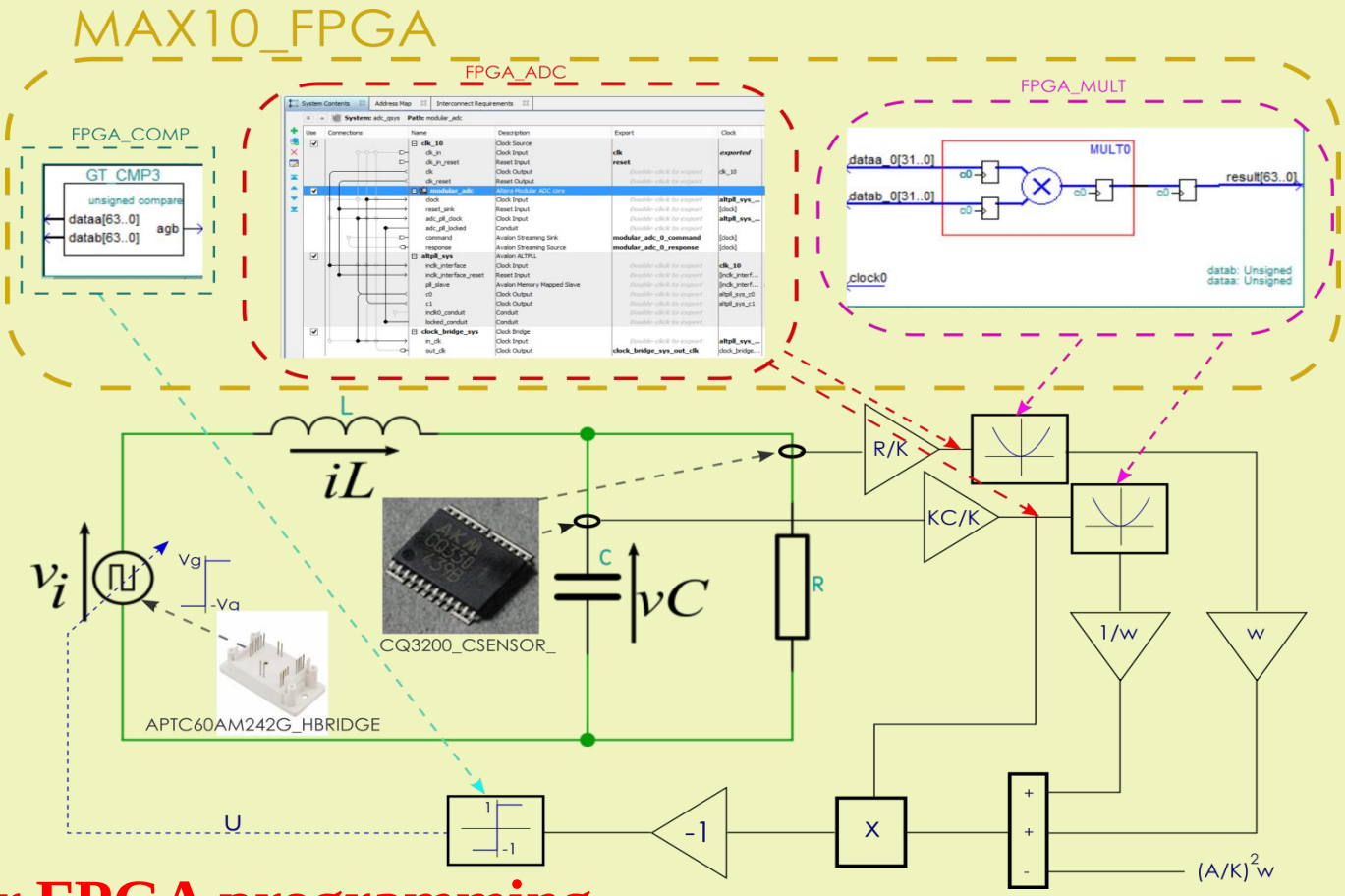

Elements for FPGA programming

❑ SELF-OSC. FOR SINUSOIDAL GENERATION

SELF-OSCILLATING LOW- FREQUENCY SINUSOIDAL GENERATION

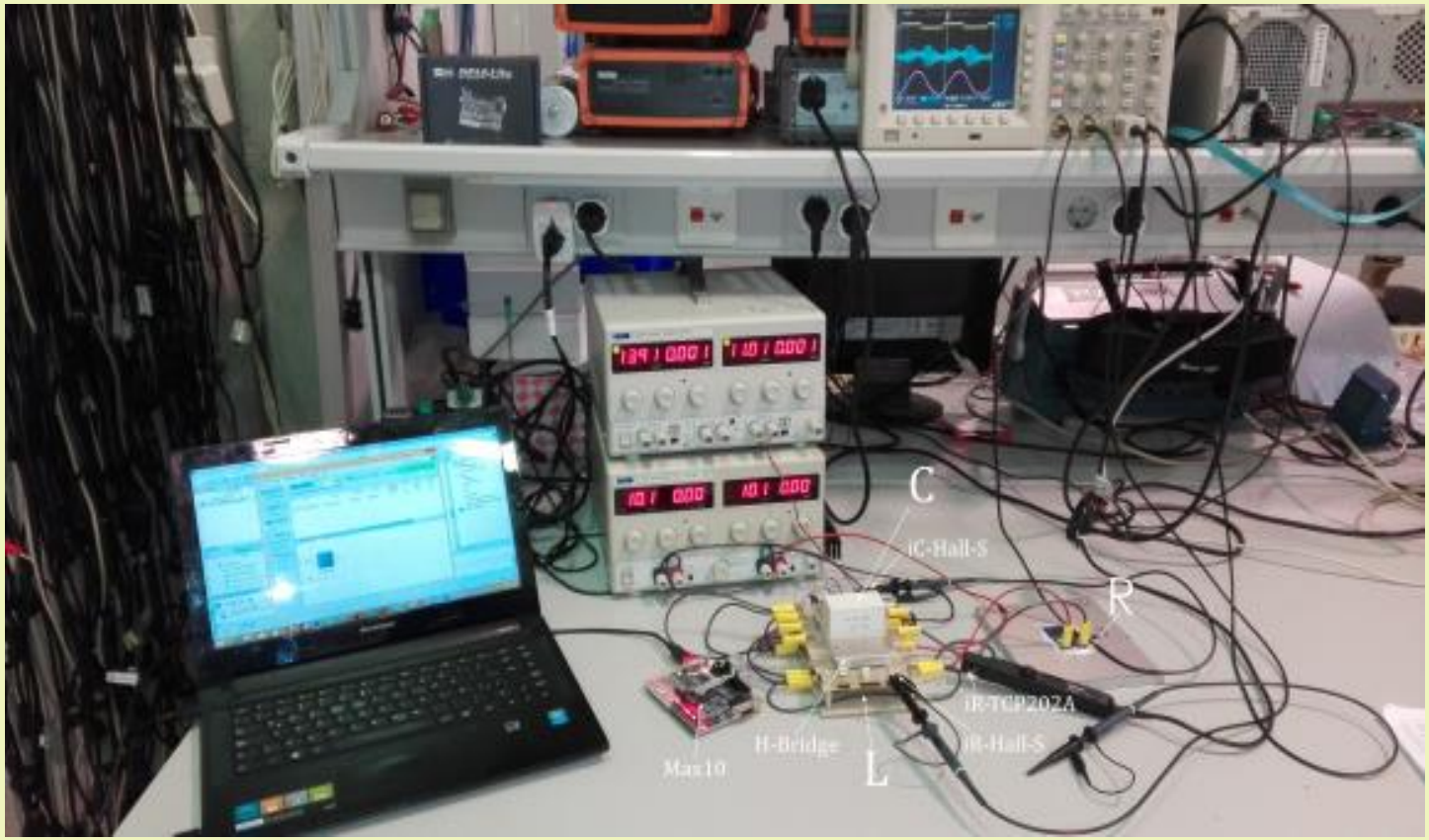

Workbench

❑ SELF-OSC. FOR SINUSOIDAL GENERATION

SELF-OSCILLATING LOW- FREQUENCY SINUSOIDAL GENERATION

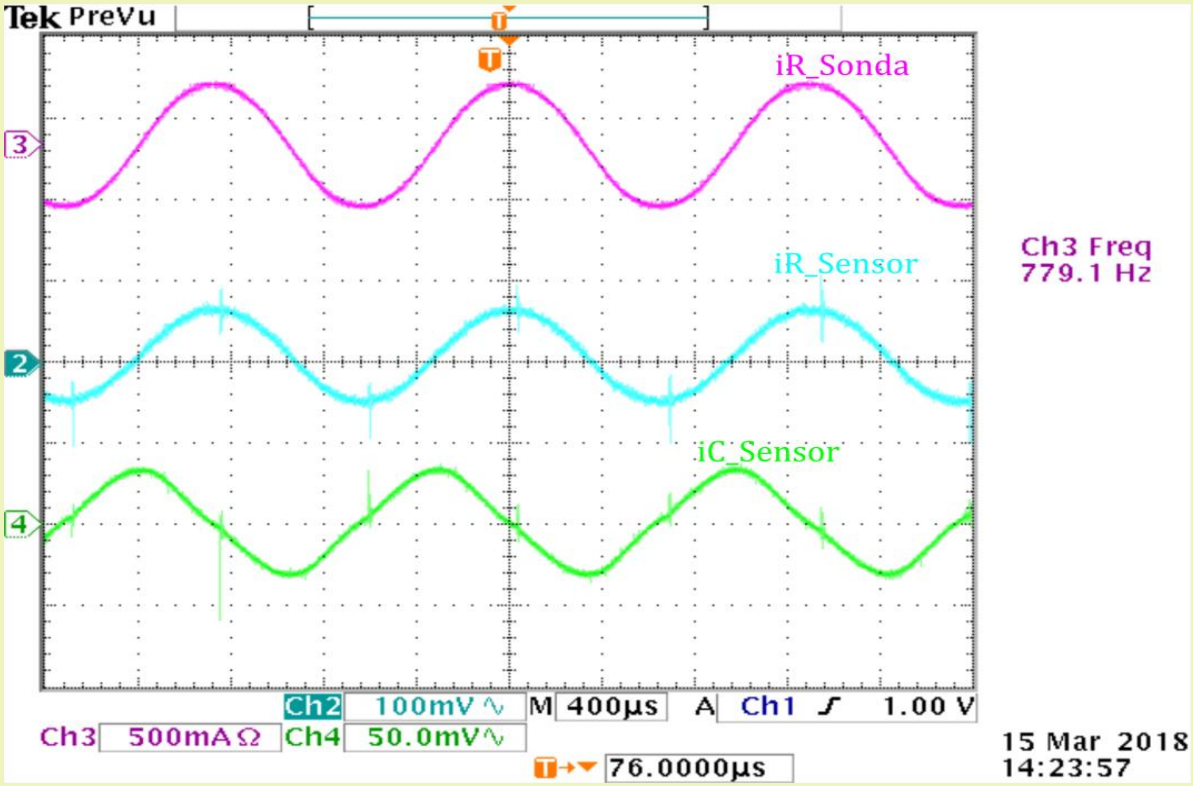

Experimental results

❑ SELF-OSC. FOR SINUSOIDAL GENERATION

SELF-OSCILLATING LOW- FREQUENCY SINUSOIDAL GENERATION

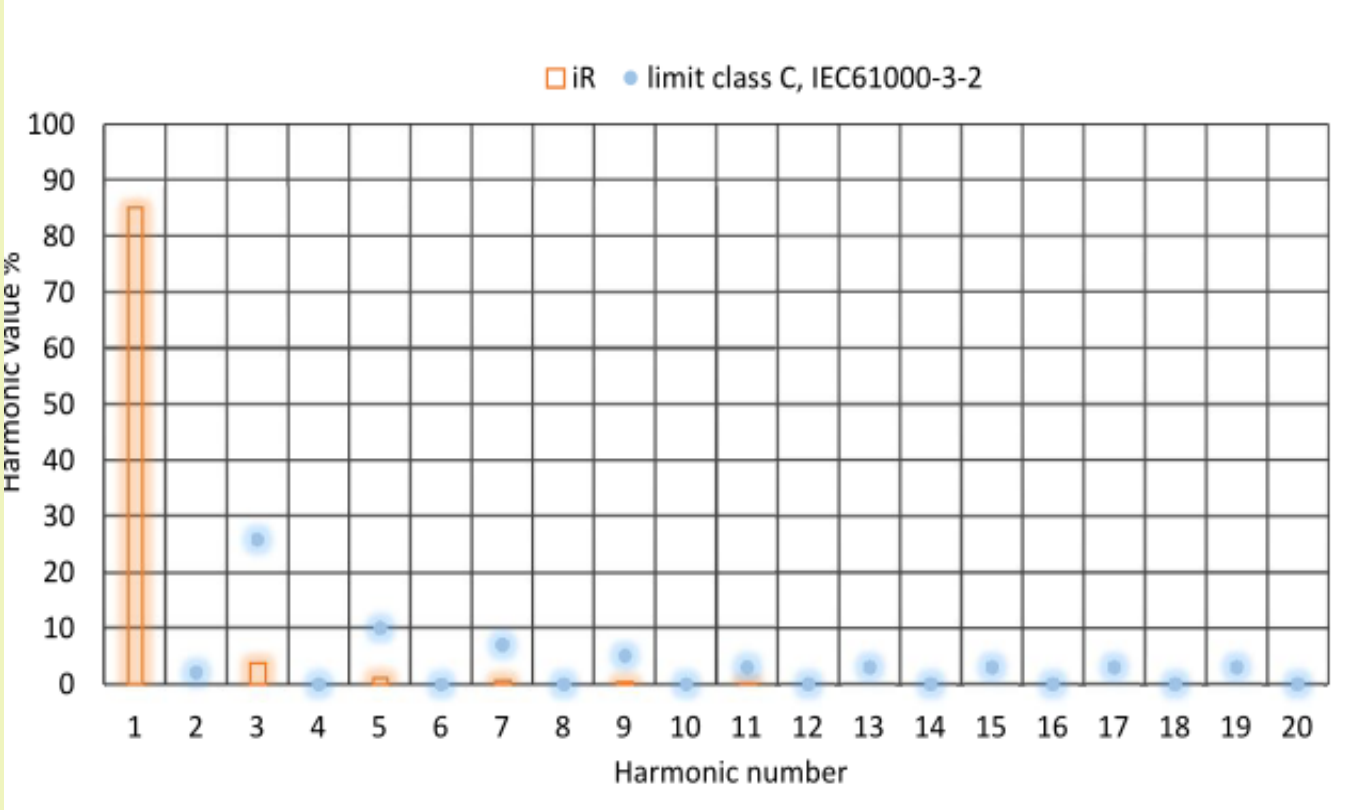

Spectrum analysis

Control of constant power loads

❑ CONTROL OF CONSTANT POWER LOADS

Sliding-mode control of a boost converter supplying a CPL

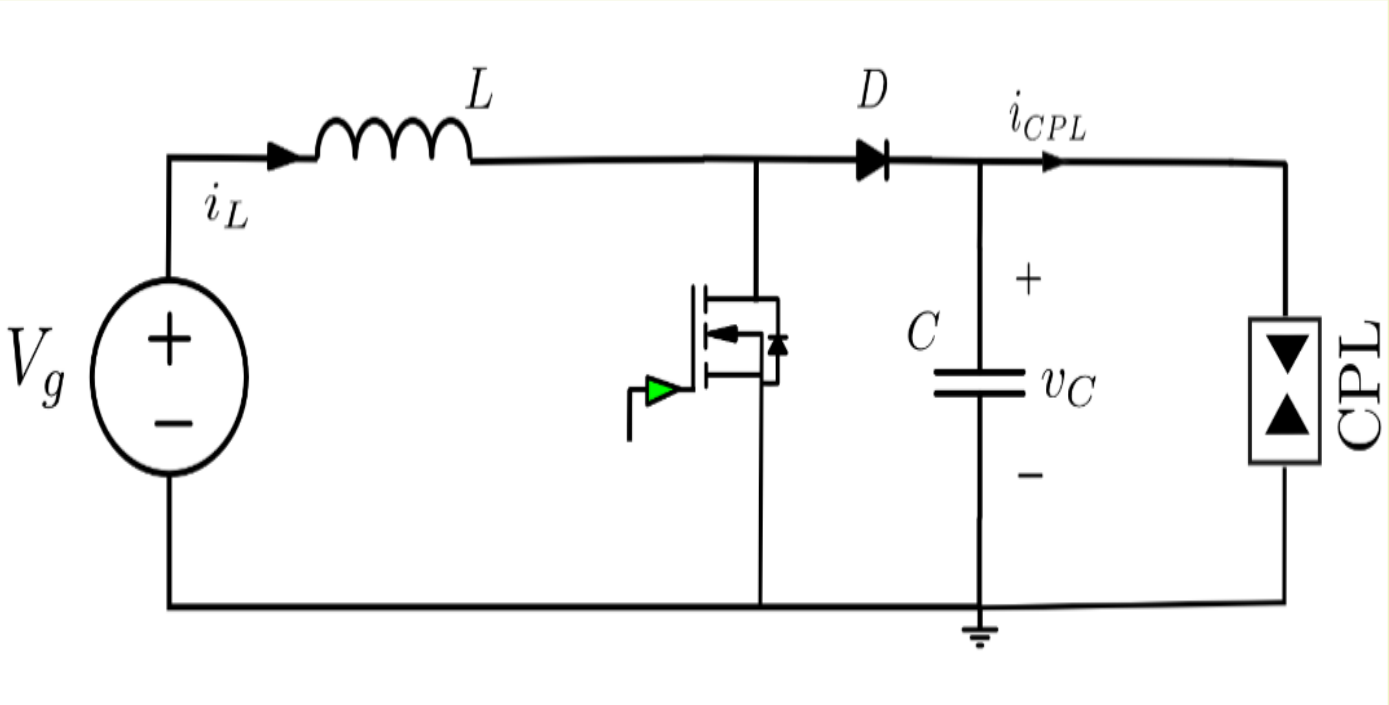

$$i_{CPL} = \frac{P}{v_C}$$

❑ CONTROL OF CONSTANT POWER LOADS

Sliding-mode control of a boost converter supplying a CPL

Converter equations

$$\frac{di_L}{dt} = -\frac{v_C}{L}(1-u) + \frac{V_g}{L}$$

$$\frac{dv_C}{dt} = \frac{i_L}{C}(1-u) - \frac{P}{Cv_C}$$

Switching surface

$$s := K_C(v_C - V_{REF}) + K_i(i_L - I_{REF})$$

Control law

$$\begin{array}{lll} \mathrm{u} = 0 & \text{when} & s > 0 \\ \mathrm{u} = 1 & \text{when} & s < 0 \end{array}$$

❑ CONTROL OF CONSTANT POWER LOADS

Start-up from different initial conditions

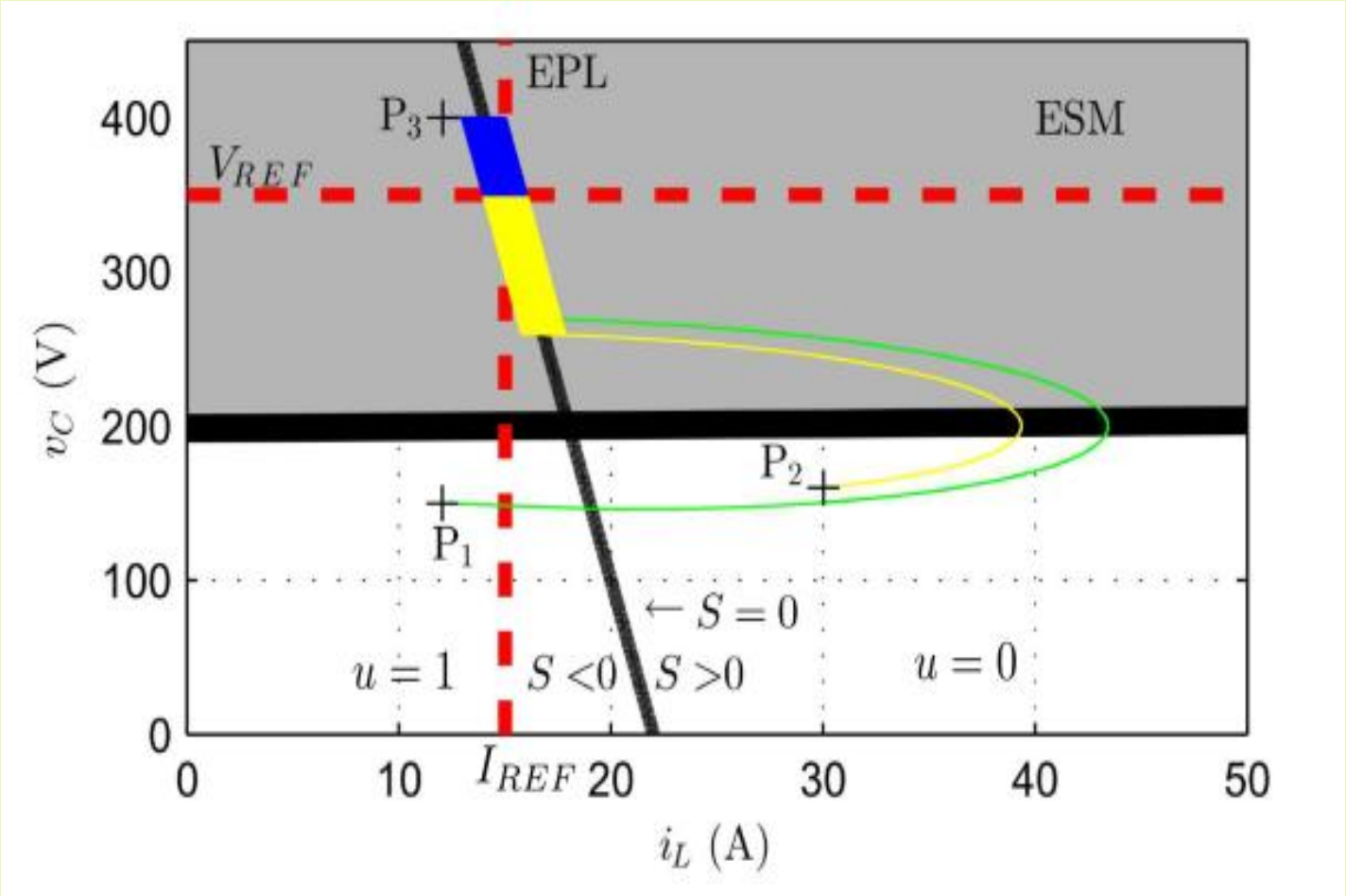

❑ CONTROL OF CONSTANT POWER LOADS

Start-up for different values of control parameters

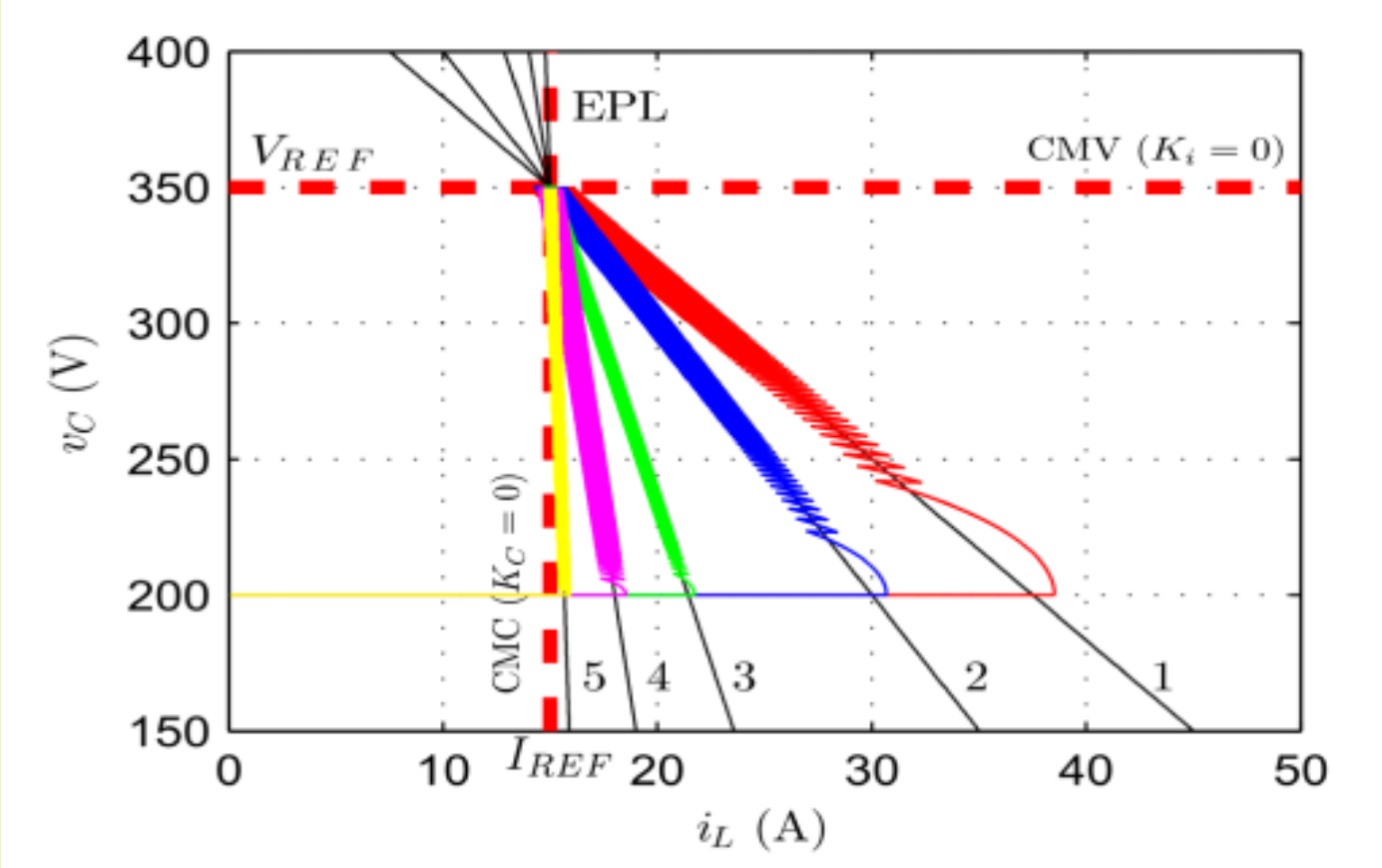

❑ CONTROL OF CONSTANT POWER LOADS

Steady-state response (P = 1kW)

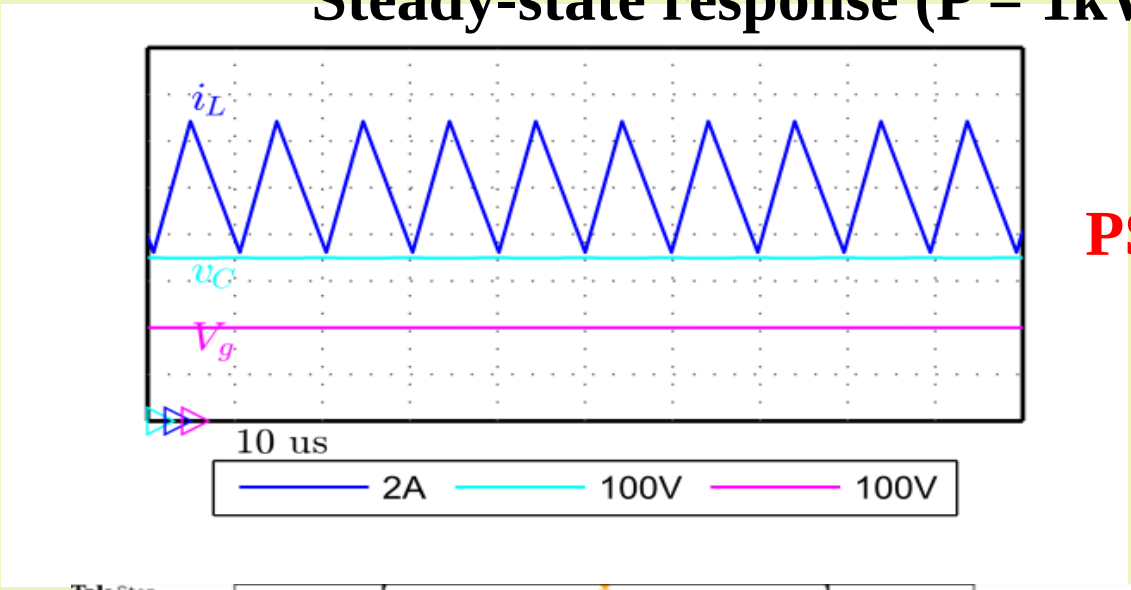

PSIM Simulation

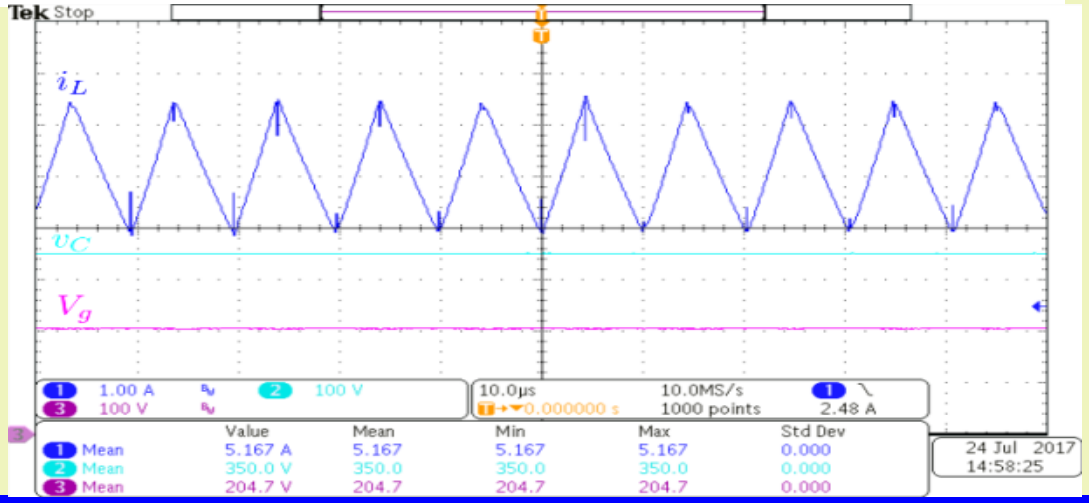

Experiment

Transient response for step-type changes in the CPL:1kW-0.5kW-1kW

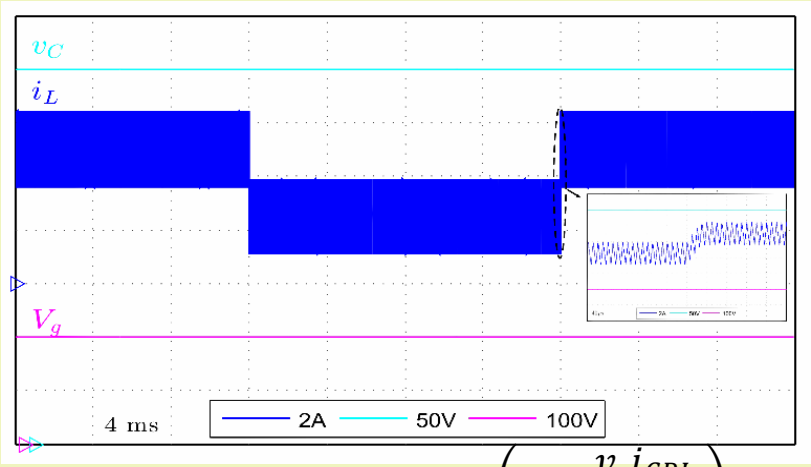

PSIM Simulation

$$s := K_C(v_C - V_{REF}) + K_i\left(i_L - \frac{v_c i_{CPL}}{v_g}\right)$$

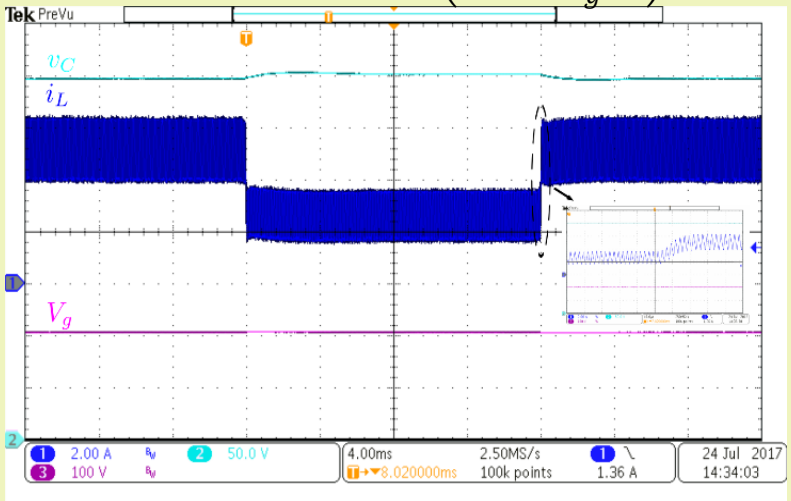

Experiment

CPL emulated by electronic load EL 9000 from Elektro- Automatik

❑ CONTROL OF CONSTANT POWER LOADS

INSTANTANEOUS CPL BASED ON A BUCK CONVERTER

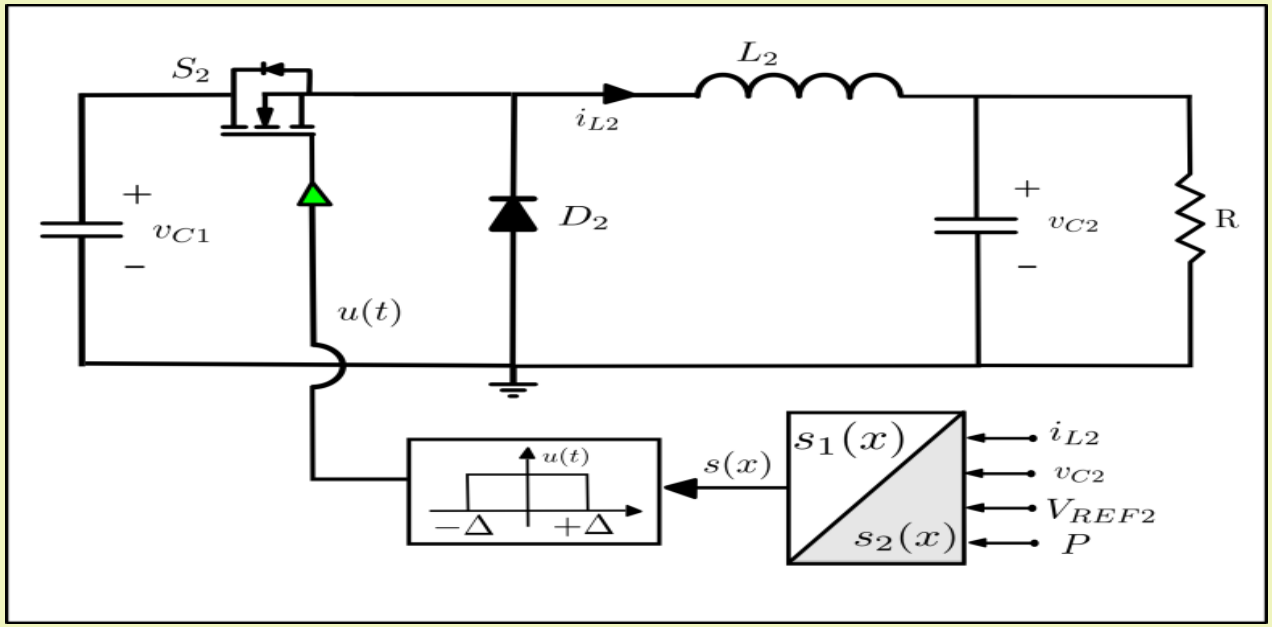

Buck converter -based CPL employing two possible sliding-mode controllers

$$S_1(x) = K_{v2}(v_{C2} - V_{REF2}) + K_{i2}\frac{d}{dt}(v_{C2} - V_{REF2})$$

$$S_2(x) = v_{C2} i_{L2} - P$$

❑ CONTROL OF CONSTANT POWER LOADS

Experimental transient response for load changes in the reference P

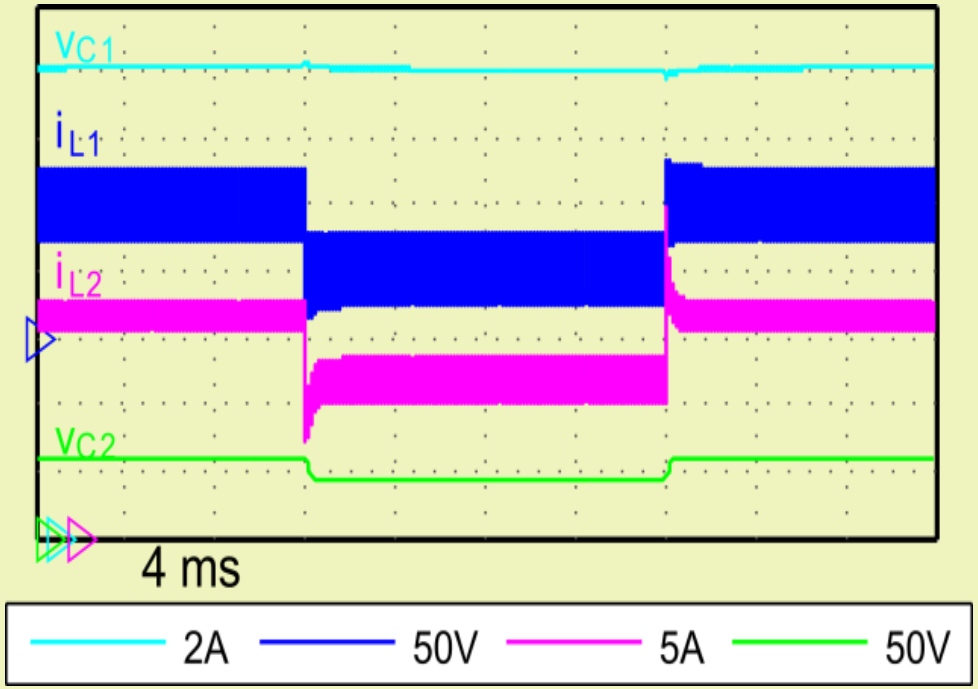

P profile: 1kW - 500W-1kW

The buck converter is controlled through $S_2(x)$

❑ SYNTHESIS OF CONSTANT POWER LOADS

The implementation of $S_2(x)$ suggest that this type of switching surfaces could be use to emulate the behaviour of CPLs using DC-DC switching converters

Does it make sense to build a CPL emulator ?

❑ SYNTHESIS OF CONSTANT POWER LOADS

Sea and undersea vehicle DC distribution test bed

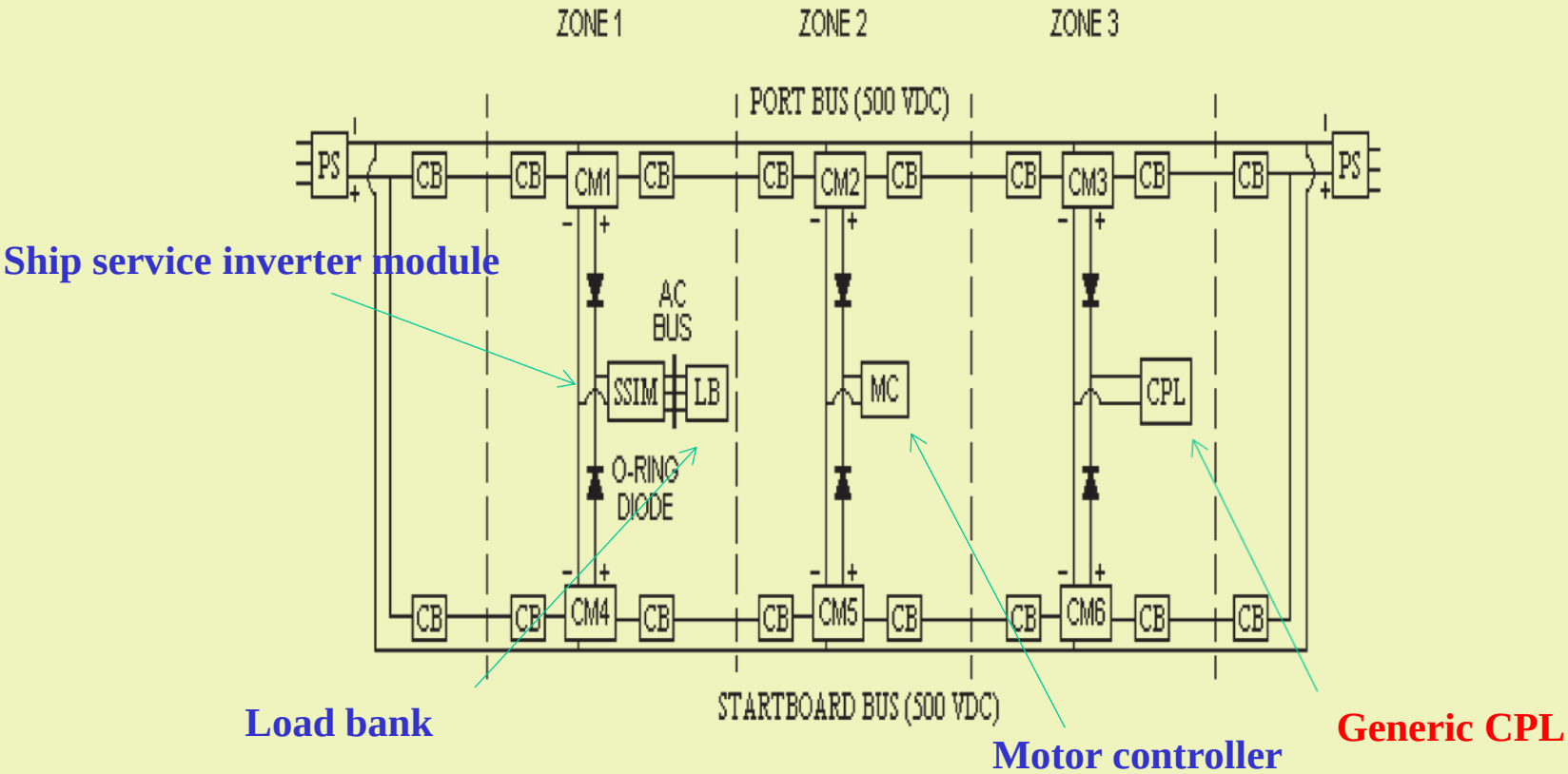

C.Rivettta et al.“Analysis and control of a buck DC-DC converter opearting with constant power load in sea and undersea vehicles”IEEE Trans. on Industry Applications, Vol.42,no.2, march/april 2006, pp. 559-572

❑ SYNTHESIS OF CONSTANT POWER LOADS

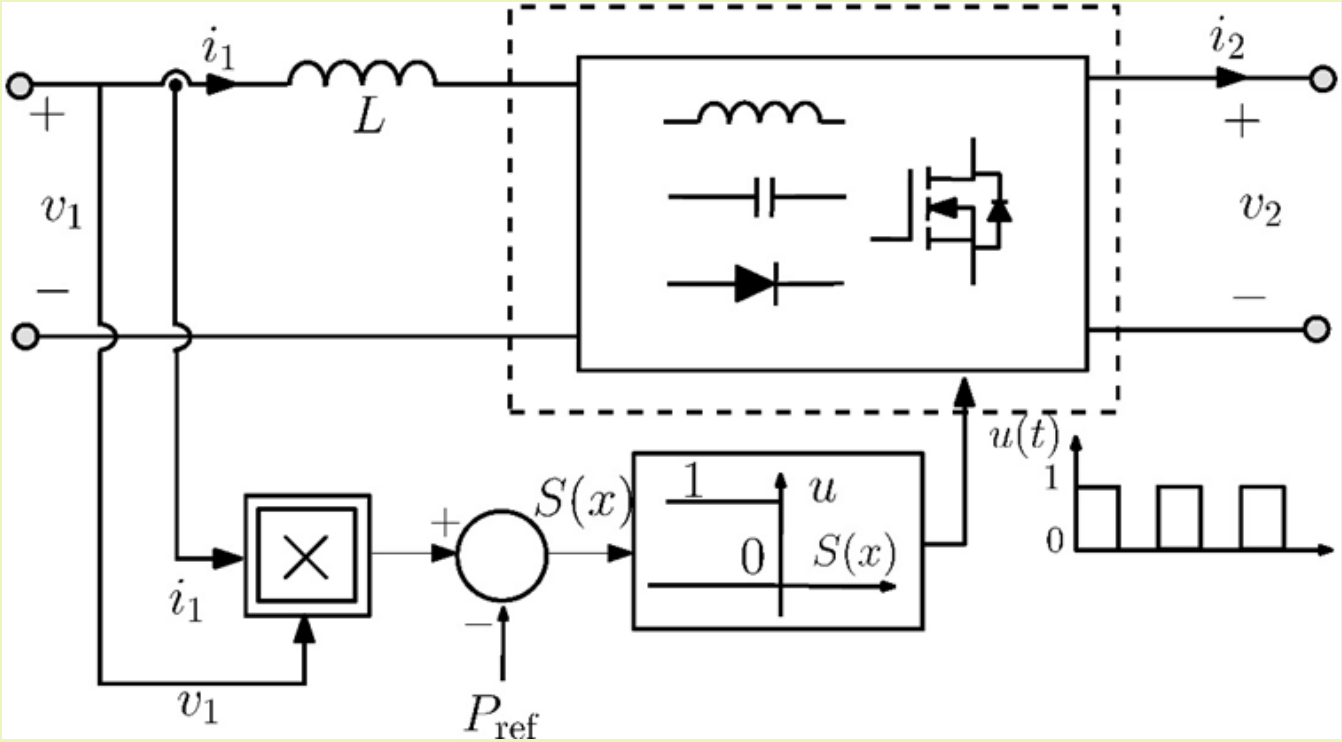

Generic DC-DC converter acting as instantaneous CPL

❑ SYNTHESIS OF CONSTANT POWER LOADS

CPL Candidates

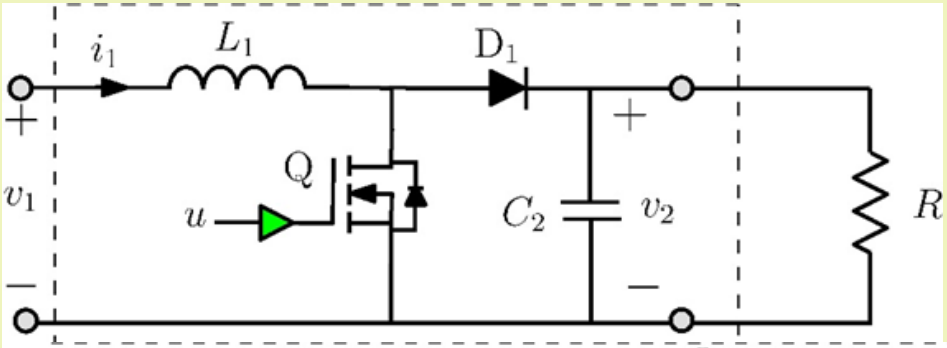

Boost

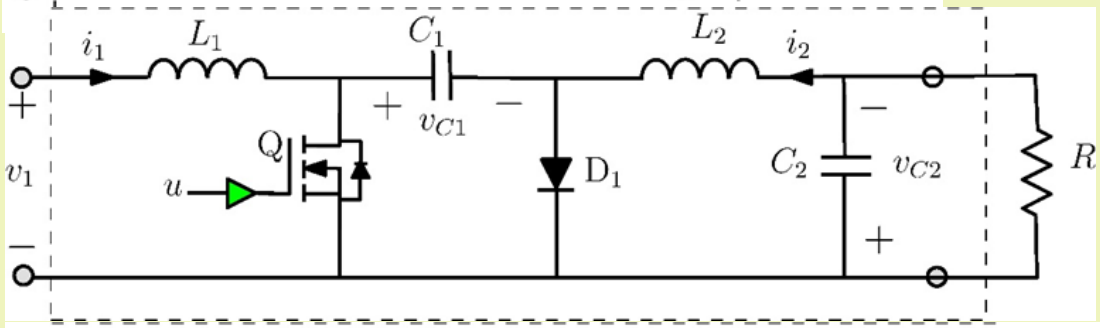

Cuk

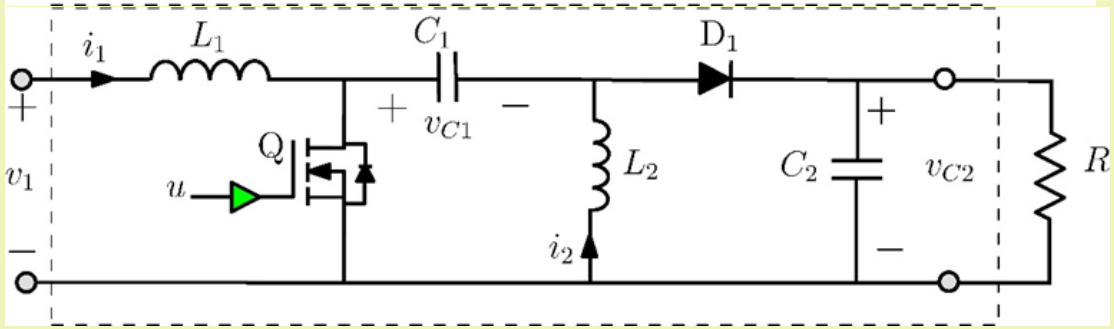

SEPIC

PSIM simulations

Start-up and steady-state

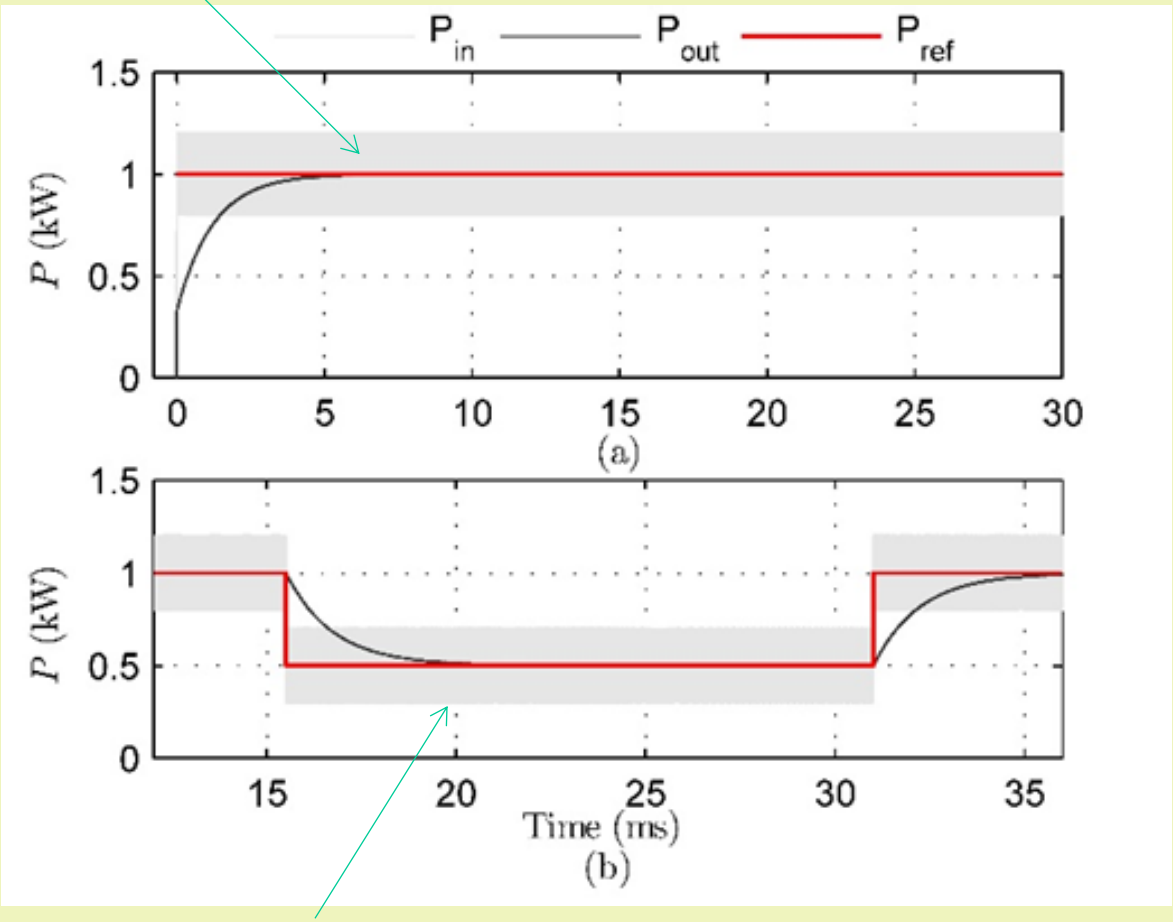

Change in P_{ref} from 1kW to 500W

CONCLUSIONS

- **Two classes of SPC have been presented:**
  - **Self-oscillating resonant converters**
  - **DC-DC switching converters loaded by CPL**
- **The first family can be competitive in battery conductive charge and efficient lighting. It's application to contacless charge is still open.**
- **Demonstrating the stability of the self-oscillating mechanism in 4th order converters is an open subject**
- **Low-frequency self-oscillation involves a complex implementation. More practical research is needed**
- **Sliding-mode control shows promising results in the control of converters with CPL.More research has to be performed dealing with power uncertainty or power estimation**

❑ REFERENCES

1) Bonache-Samaniego, R.; Olalla, C.; Martinez-Salamero, L.; Valderrama-Blavi, H., "Design of Self-Oscillating Resonant Converters Based on a Variable Structure Systems Approach." IET Power Electronics, vol. 9, Issue 1, pp. 111-119, January 2016.

2) Bonache-Samaniego, R.; Olalla, C; Martinez-Salamero, L., "Dynamic Modeling and Control of Self-Oscillating Parallel Resonant Converters Based on a Variable Structure Systems Approach.“ IEEE Transactions on Power Electronics, Volume 32, no.2, pp.1469-1480, 2017.

3) Bonache-Samaniego, R.; Olalla, C.; Martinez-Salamero, L.; Maksimovic, D., "6.78 MHz Self-Oscillating Parallel Resonant Converter Based on GaN Technology." Applied Power Electronics Conference (APEC 2017), Tampa, USA, March 26-30, 2017.

4) Martinez-Treviño B. A., Jammes R., El Aroudi A., Martinez-Salamero L., "Sliding-mode control of a boost converter supplying a constant power load",20th World Congress of the International Federation of Automatic Control (IFAC), Toulouse, France, July 9-14, 2017

5) Martinez-Treviño B. A., El Aroudi A., Martinez-Salamero L.,"Synthesis of constant power loads using switching converters under sliding-mode control ", IEEE International Symposium on Circuits and Systems (ISCAS) , Florence, Italy, May 27-30, 2018