Stability of infinite dimensional systems
Application to a drilling pipe

24 Jan 2019

M. Barreau, A. Seuret, F. Gouaisbaut and L. Baudouin
LAAS - CNRS / Equipe MAC

Overview

I Model for a drilling pipe
1) Problem statement
2) Controller structure

II A toy example : coupled ODE / damped string equation
1) Problem statement and wellposedness
2) Riemann invariant and naive Lyapunov functional
3) The projection methodology and enriched Lyapunov functional

III Back to the drilling : Simulations and results

IV Conclusion & Perspectives

Model for a drilling pipe

What is a drilling pipe

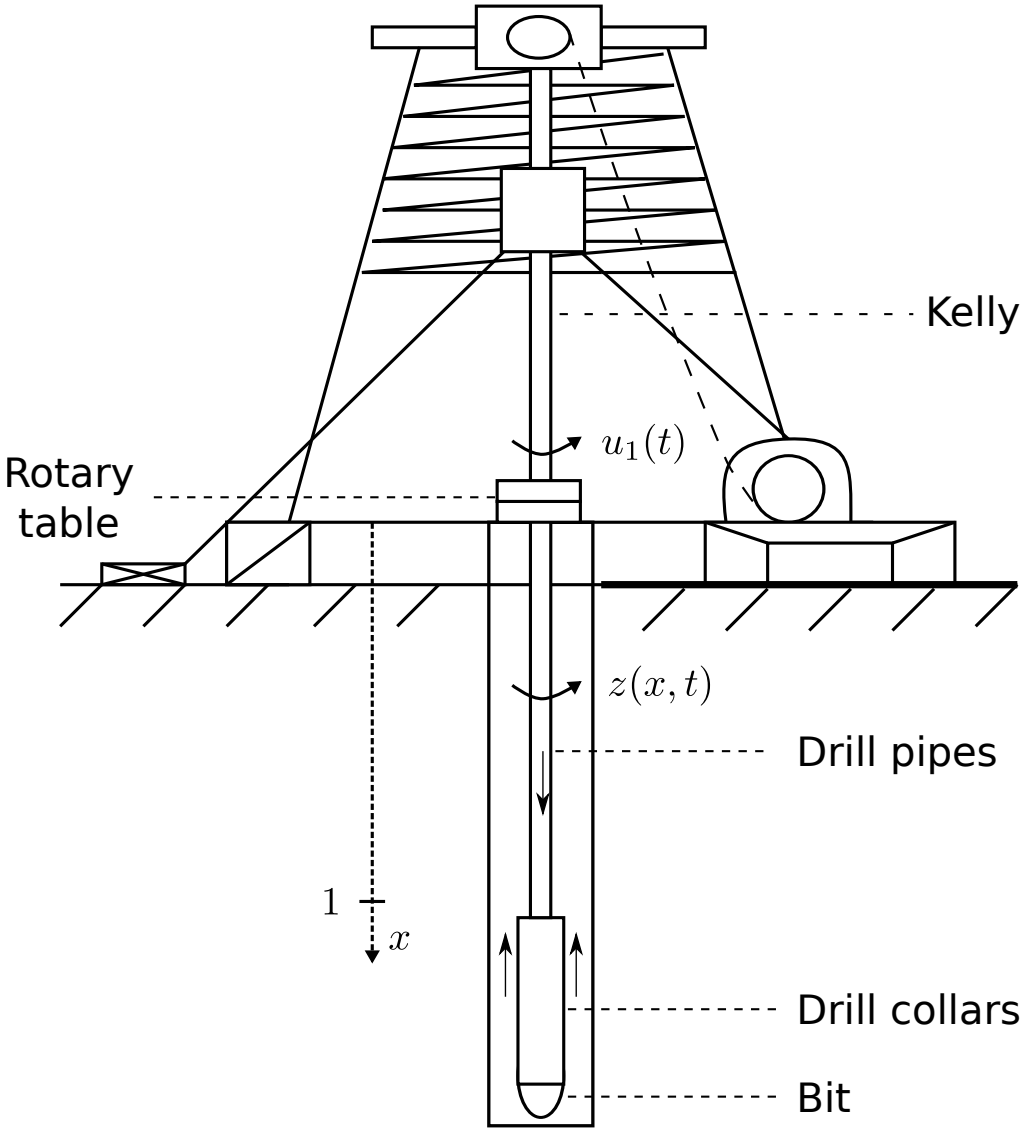

[Karnopp, 1985 ; Challamel, 2000 ; Saldivar & al., 2015]

What is a drilling pipe

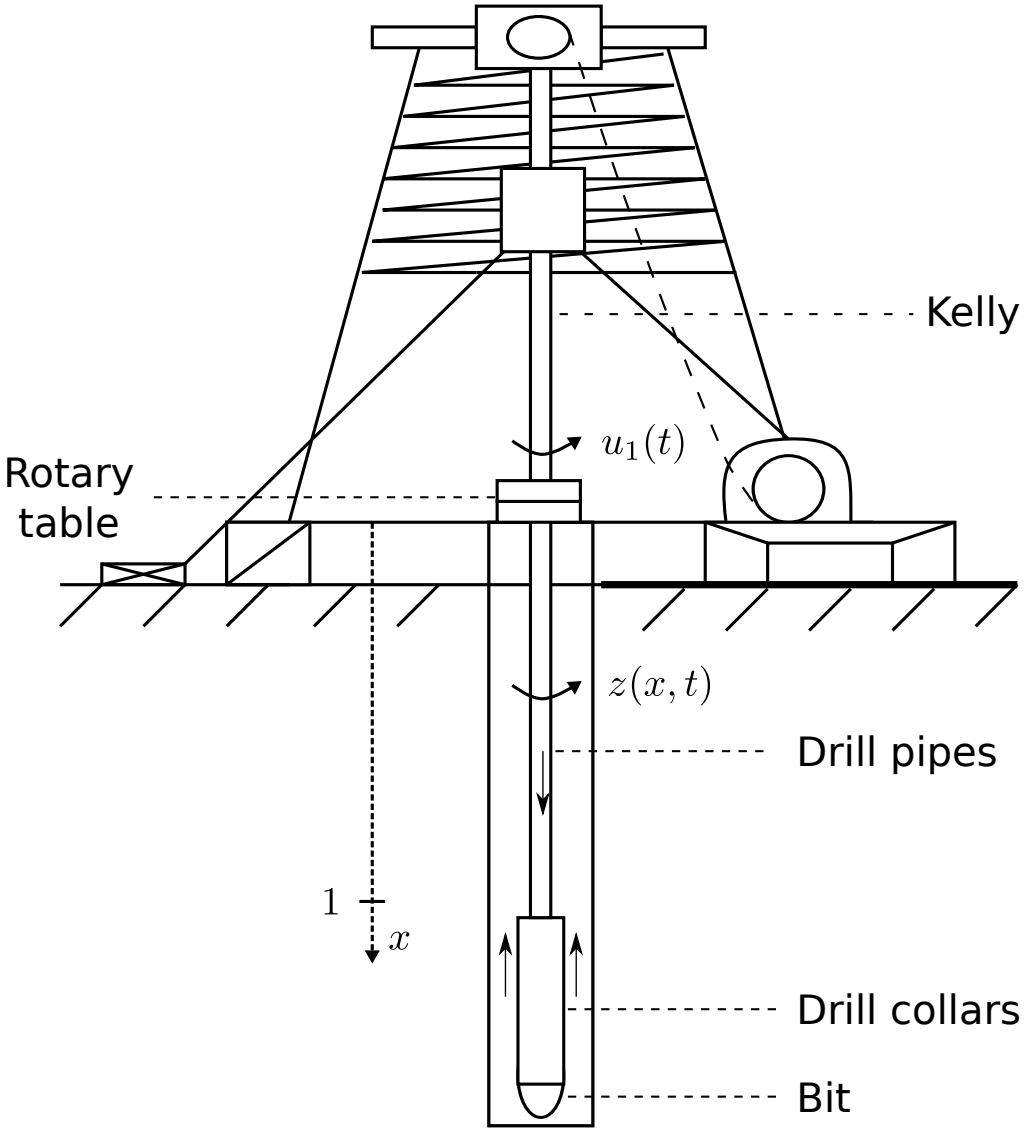

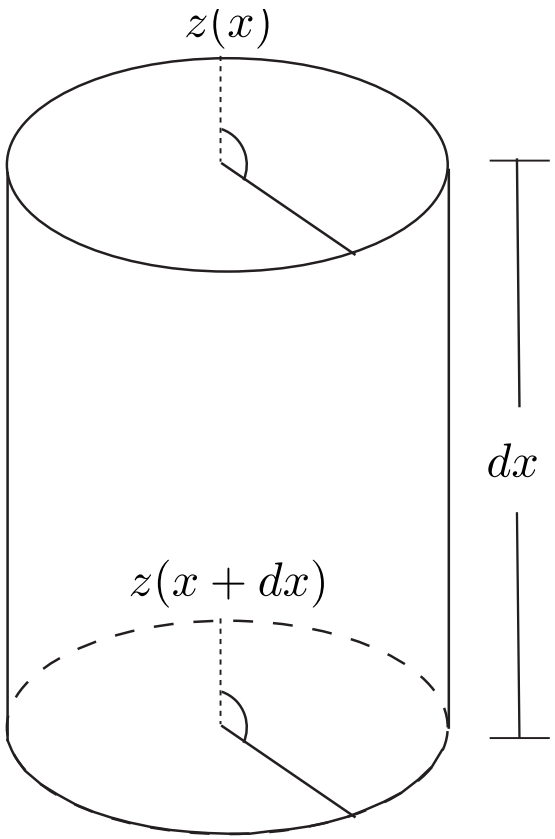

z : Internally damped wave equation

[Karnopp, 1985 ; Challamel, 2000 ; Saldivar & al., 2015]

What is a drilling pipe

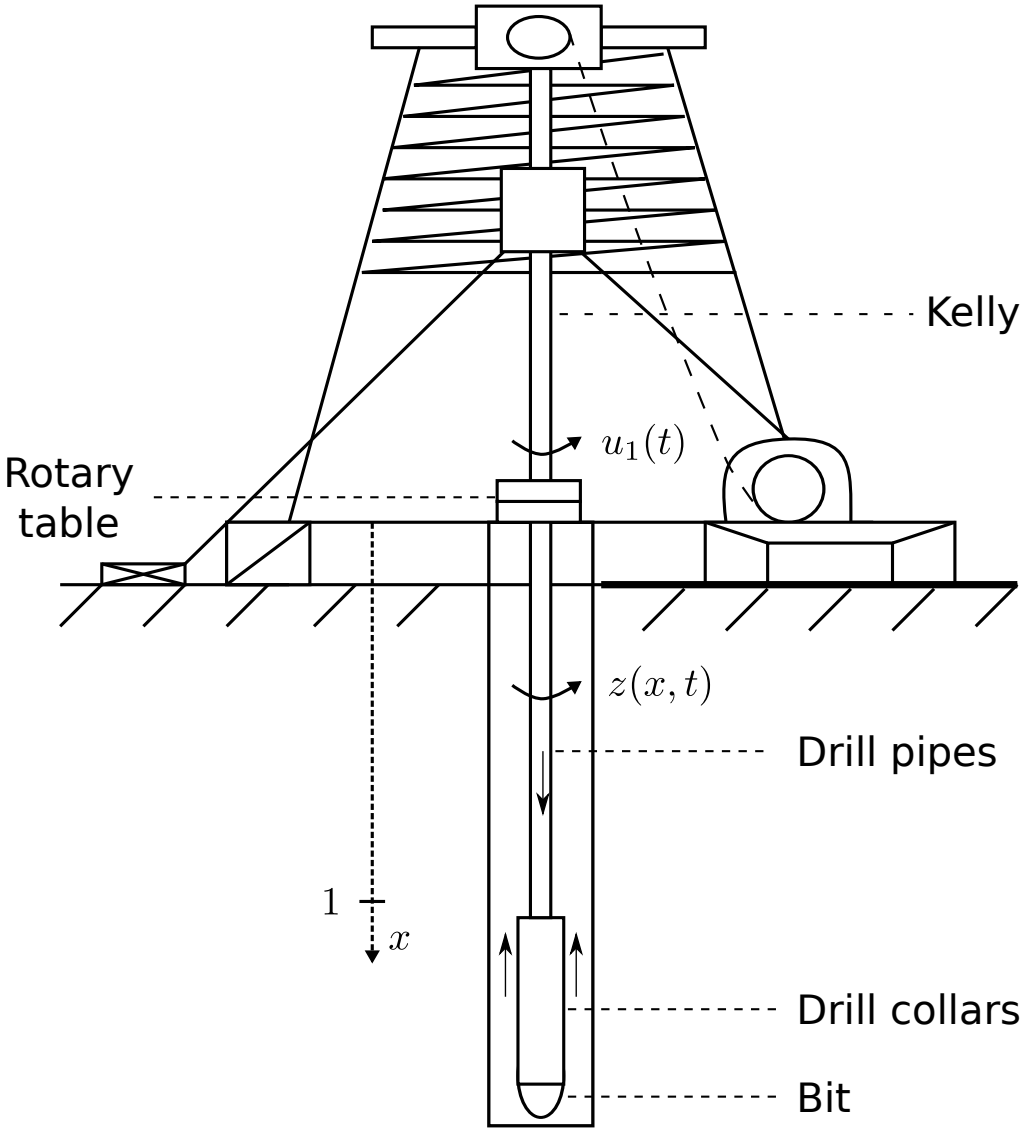

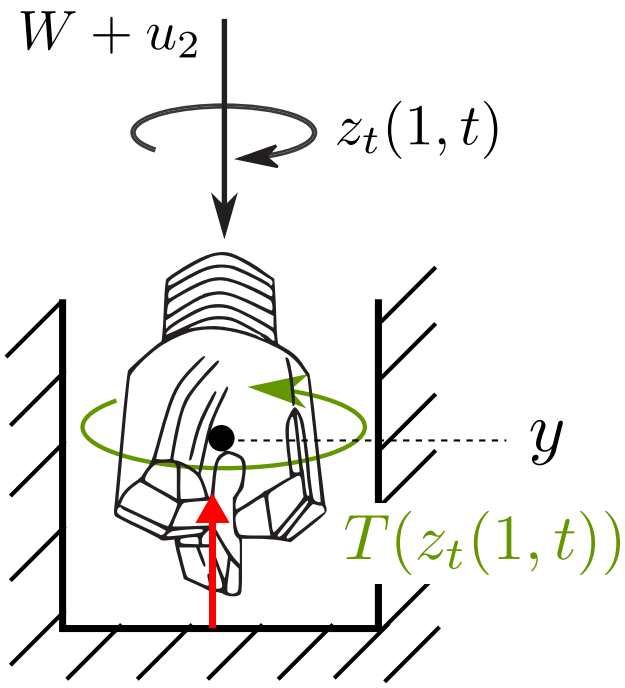

$$z_{tt}(1) = \frac{a}{J_b} z_x(1) + \frac{T(z_t(1))}{J_b}$$

$$\ddot{y} = -\frac{\lambda}{m_b}\dot{y} + \frac{W+u_2}{m_b} + \frac{\delta}{m_b} T(z_t(1))$$

[Karnopp, 1985 ; Challamel, 2000 ; Saldivar & al., 2015]

Problem statement

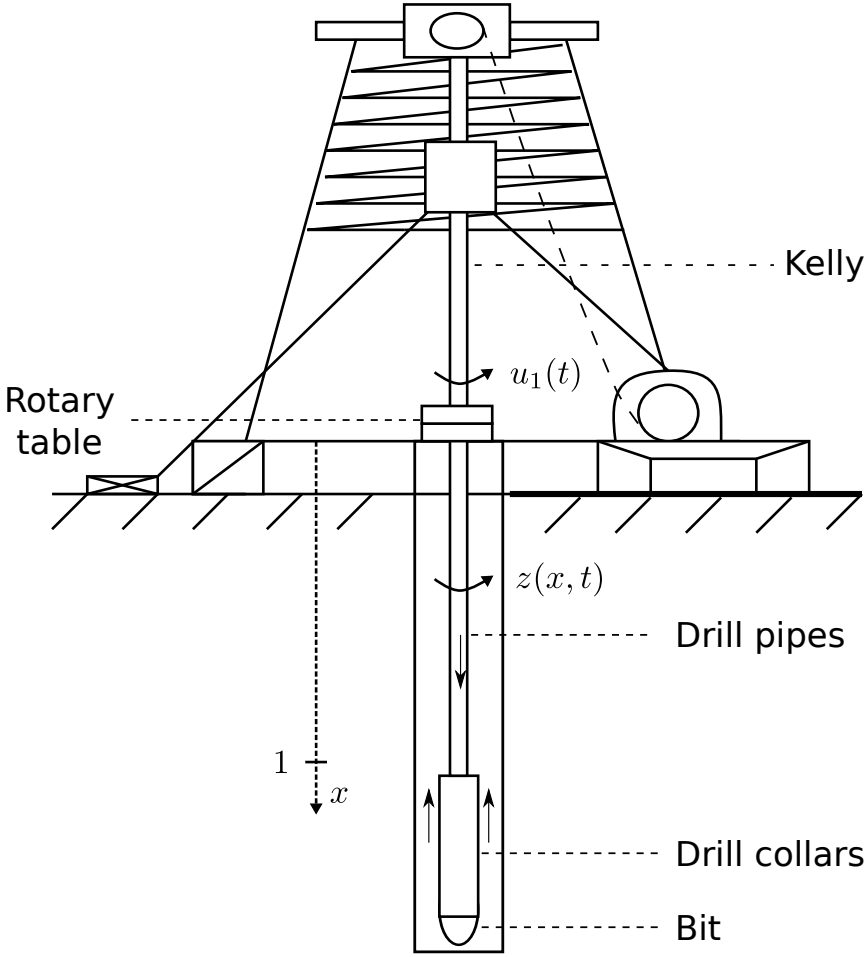

$$\begin{cases} z_{tt}(x,t) = c^2 z_{xx}(x,t) - d z_t(x,t), \\ z_x(0,t) = g\left(z_t(0,t) - u_1(t)\right), \\ z_x(1,t) = -h z_{tt}(1,t) - k z_t(1,t) \\ \qquad\qquad -q T_{nl}(z_t(1,t)), \\ \dot{Y}(t) = AY(t) + Bu_2(t) \\ \qquad + E_1 z_t(1,t) + E_2 T_{nl}(z_t(1,t)). \end{cases}$$

[Saldivar & al., 2016]

Problem statement

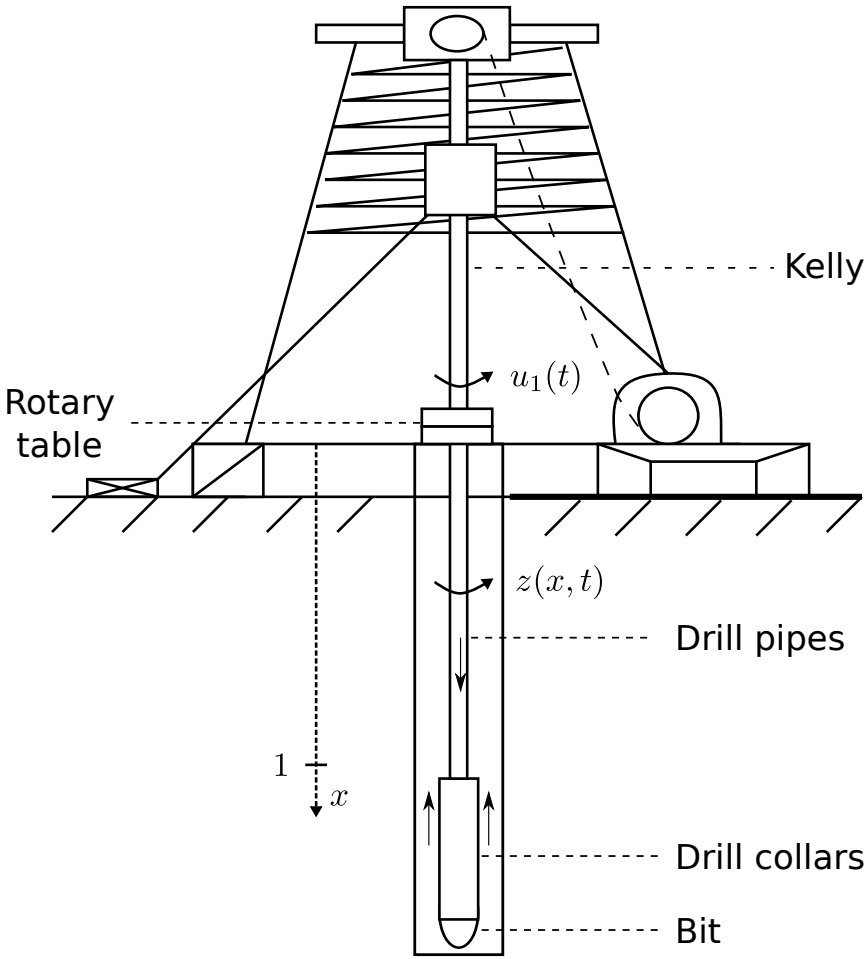

$$
\begin{cases}
z_{tt}(x,t) = c^2 z_{xx}(x,t) \cancel{- d z_t(x,t)}, \\
z_x(0,t) = g\left(z_t(0,t) - u_1(t)\right), \\
z_x(1,t) = \cancel{-h z_{tt}(1,t)} - k z_t(1,t) \\
\qquad\qquad - q T^e, \\
\dot{Y}(t) = AY(t) + Bu_2(t) \\
\qquad\qquad + E_1 z_t(1,t) + E_2 T^e.
\end{cases}
$$

Objectives :

1. $z_t(1,t) \xrightarrow[t\to\infty]{} \Omega_e$;
2. α-exponential stability.

[Saldivar & al., 2016]

Open-loop response

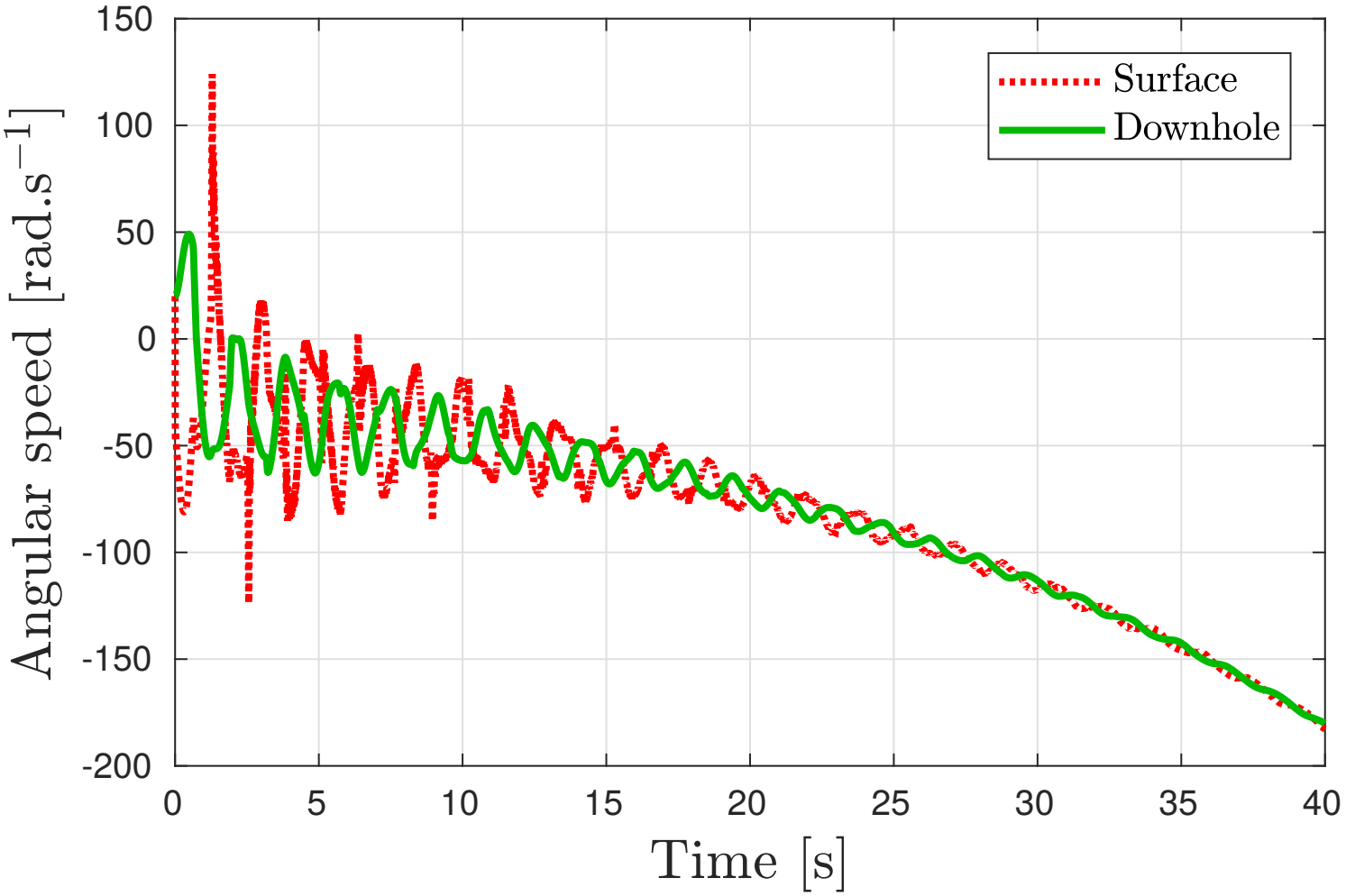

Open-loop response

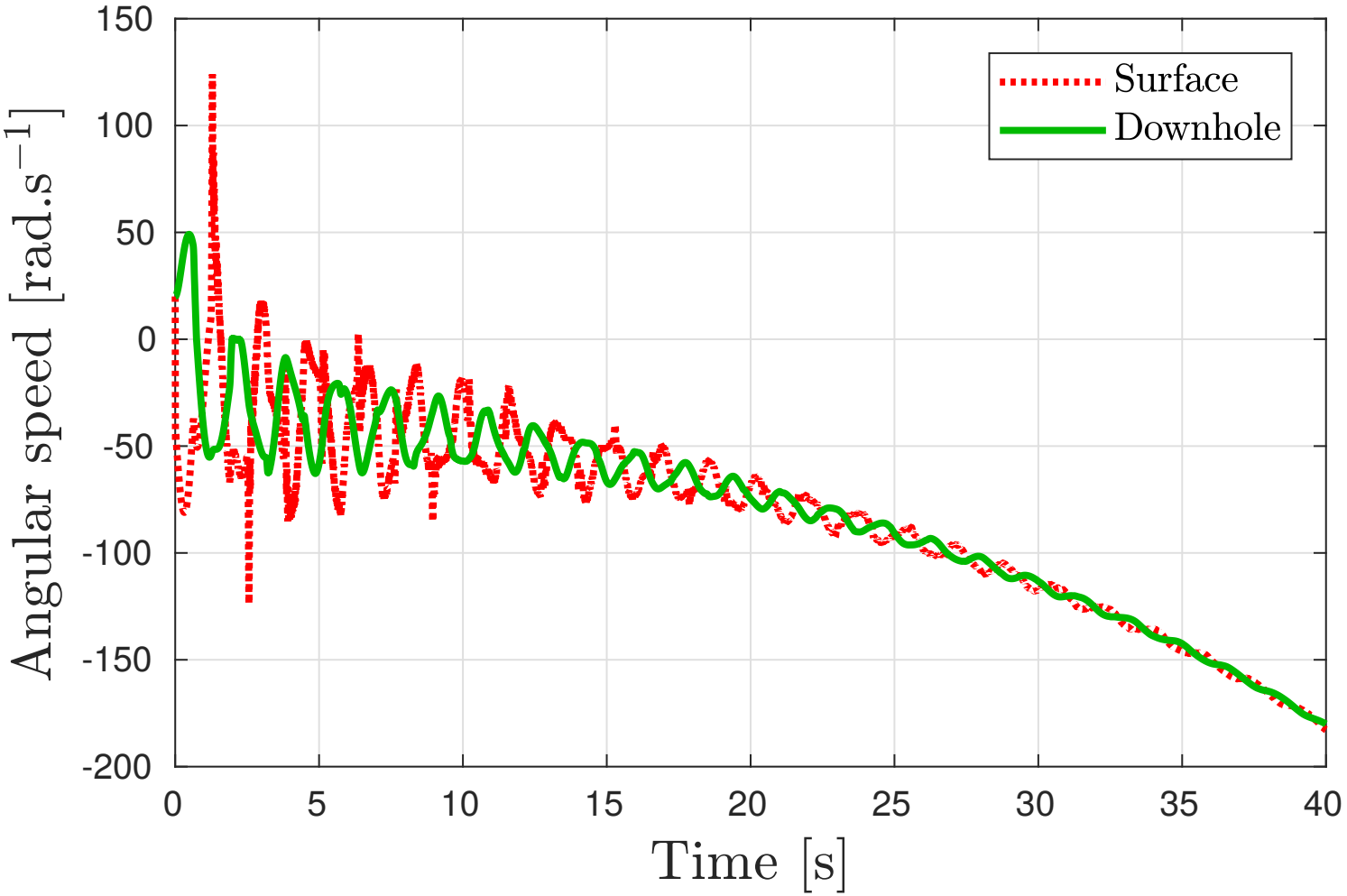

We definitely need a controller...

Controller structure

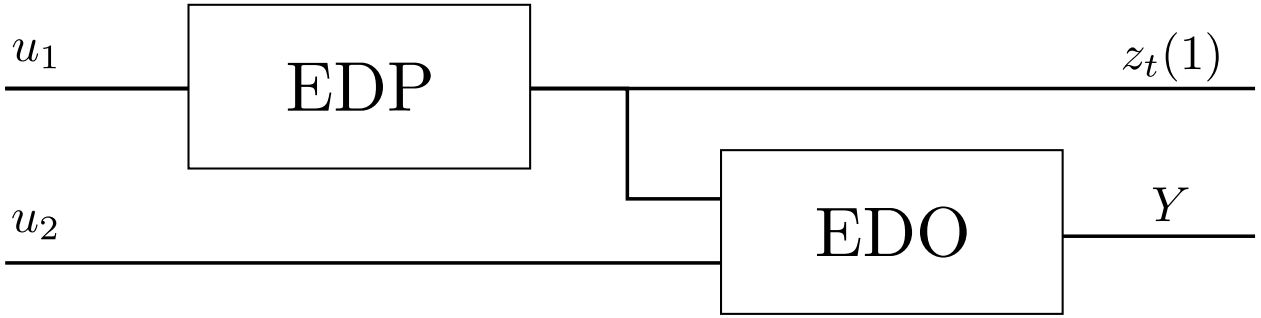

1. A feedforward control to choose the equilibrium point ;
2. A closed-loop control for the α-exponential stability.

Controller structure

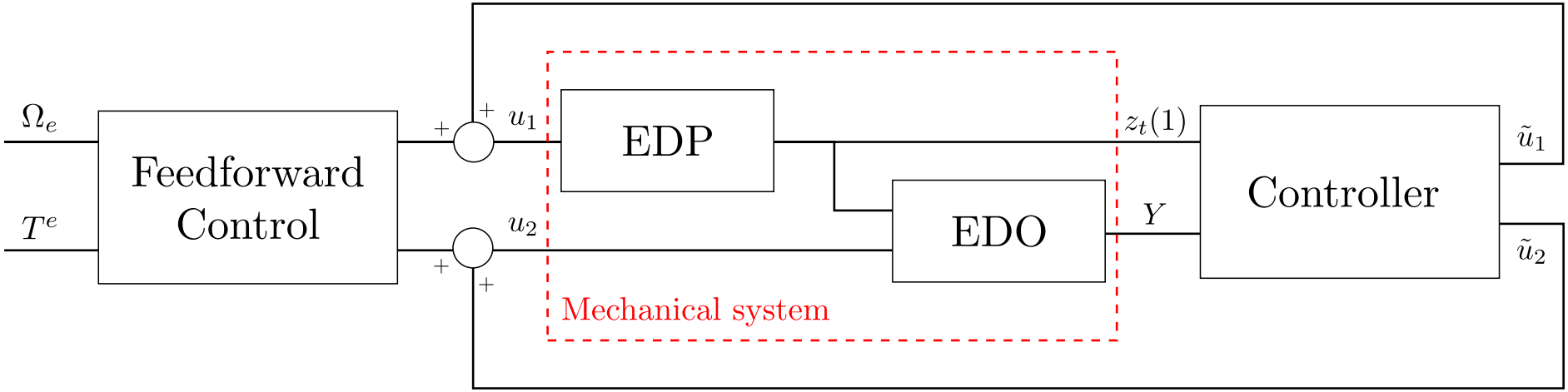

Controller [a] :

$$\begin{cases} \dot{X}_c(t) = A_c X_c(t) + B_{c1} Y(t) + B_{c2} \begin{bmatrix} z_t(0,t) \\ z_t(1,t) \end{bmatrix}, \\ \tilde{u}_1(t) = C_1 \begin{bmatrix} X_c(t) \\ Y(t) \end{bmatrix}, \\ \tilde{u}_2(t) = C_2 X_c(t) + KY(t). \end{cases}$$

a. [Saldivar & al., 2015]

Coupled ODE / PDE

New structure :

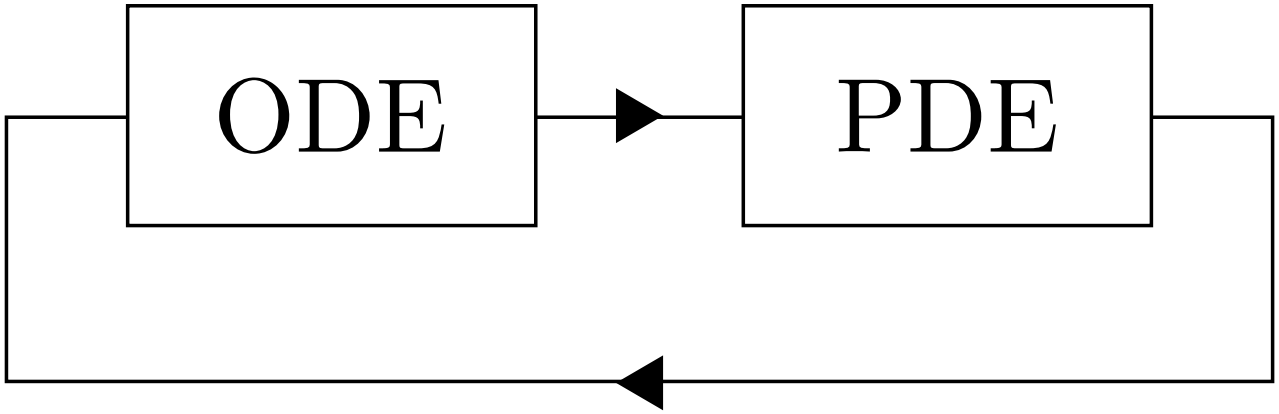

This is a coupled ODE / PDE 😍
Let's investigate its properties !

A toy example : coupled ODE / damped string equation

Coupled ODE / damped string equation

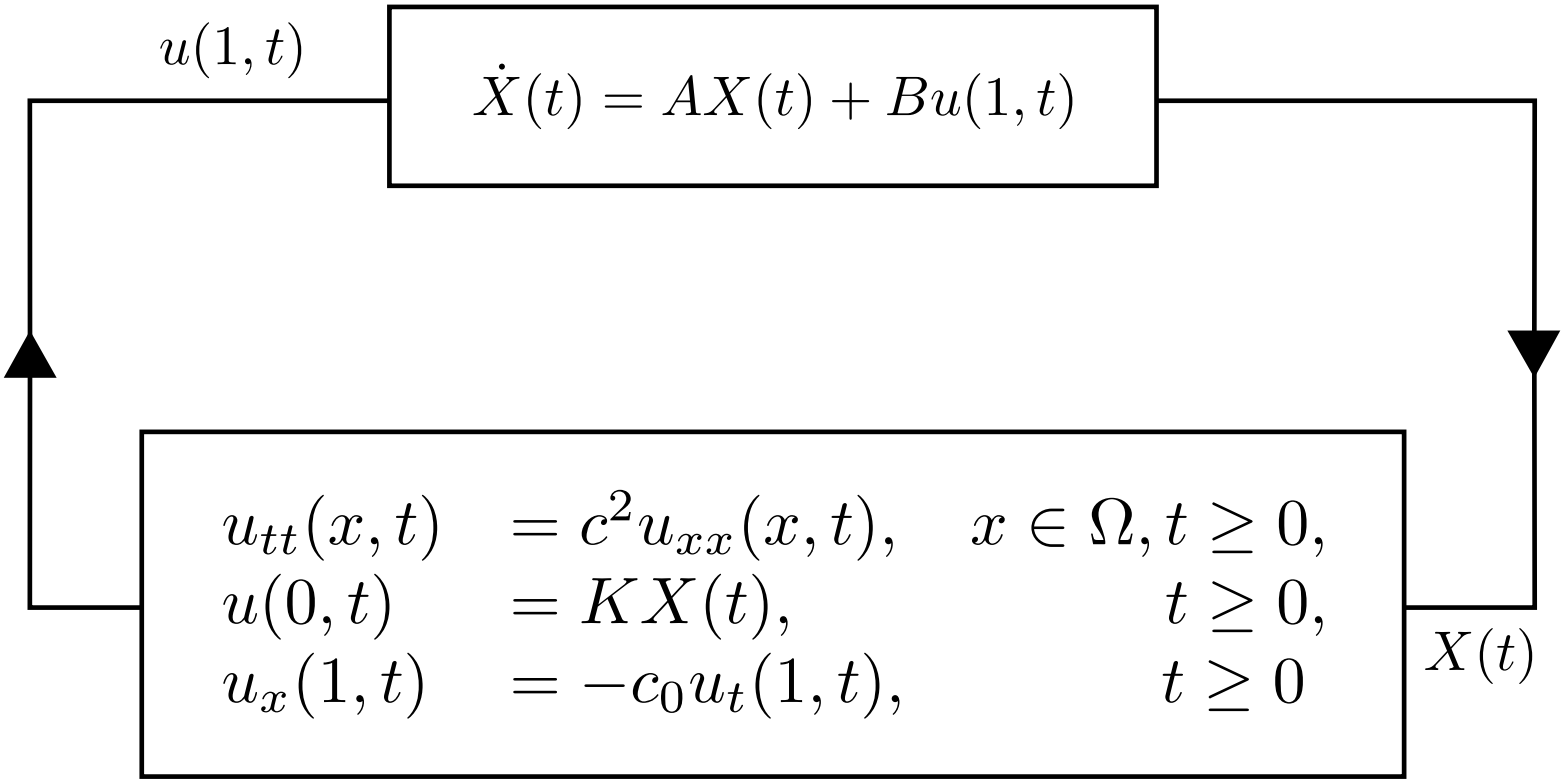

Coupled ODE / damped string equation

$$
\begin{aligned}
&\dot{X}(t) = AX(t) + Bu(1,t), && t \geq 0,\\
&u_{tt}(x,t) = c^2 u_{xx}(x,t), && x \in (0,1), t \geq 0,\\
&u(0,t) = KX(t), && t \geq 0,\\
&u_x(1,t) = -c_0 u_t(1,t), && t \geq 0,\\
&\begin{bmatrix} X(0) \\ u(x,0) \\ u_t(x,0) \end{bmatrix} = \begin{bmatrix} X^0 \\ u^0(x) \\ v^0(x) \end{bmatrix}, && x \in (0,1).
\end{aligned}
\tag{1}
$$

Wellposedness result

1. When is System (1) well-posed ?
2. What is the regularity of the solution ?
3. Which is / are the equilibrium point(s) ?

Wellposedness result

$$\mathcal{H} = \mathbb{R}^n \times H^1(0,1) \times L^2(0,1),$$

$$\|(X,u,v)\|_{\mathcal{H}}^2 = |X|_n^2 + \|u\|_{L^2}^2 + c^2\|u_x\|_{L^2}^2 + \|v\|_{L^2}^2.$$

Wellposedness result

$$\mathcal{H} = \mathbb{R}^n \times H^1(0,1) \times L^2(0,1),$$

$$\|(X,u,v)\|_{\mathcal{H}}^2 = |X|_n^2 + \|u\|_{L^2}^2 + c^2\|u_x\|_{L^2}^2 + \|v\|_{L^2}^2.$$

Well-posedness

There **exists a unique** solution (X, u, u_t) to System (1) with initial conditions $(X^0, u^0, v^0) \in \mathcal{D}$ where

$$\mathcal{D} = \left\{(X,u,v) \in \mathbb{R}^n \times H^2 \times H^1, u(0) = KX, u_x(1) = -c_0 v(1)\right\}.$$

Moreover, the solution have the following regularity property : $(X, u, u_t) \in C^1(0, +\infty, \mathcal{H})$.

Wellposedness result

$$\mathcal{H} = \mathbb{R}^n \times H^1(0,1) \times L^2(0,1),$$

$$\|(X,u,v)\|_{\mathcal{H}}^2 = |X|_n^2 + \|u\|_{L^2}^2 + c^2\|u_x\|_{L^2}^2 + \|v\|_{L^2}^2.$$

Well-posedness

There **exists a unique** solution (X, u, u_t) to System (1) with initial conditions $(X^0, u^0, v^0) \in \mathcal{D}$ where

$$\mathcal{D} = \left\{(X,u,v) \in \mathbb{R}^n \times H^2 \times H^1, u(0) = KX, u_x(1) = -c_0 v(1)\right\}.$$

Moreover, the solution have the following regularity property : $(X, u, u_t) \in C^1(0, +\infty, \mathcal{H})$.

Theorem (Datko, 1968 & 1970)

*An infinite dimensional system is exponentially stable **if and only if** there exists a Lyapunov functional.*

Wellposedness result

$$\mathcal{H} = \mathbb{R}^n \times H^1(0,1) \times L^2(0,1),$$

$$\|(X, u, v)\|_{\mathcal{H}}^2 = |X|_n^2 + \|u\|_{L^2}^2 + c^2\|u_x\|_{L^2}^2 + \|v\|_{L^2}^2.$$

Purpose of the presentation

Given A, B, K, c and c_0, can we find V such that :

1. V is equivalent to the norm $||\cdot||_{\mathcal{H}}^2$ on $\mathcal{H}$;
2. and its derivative along the trajectories is negative ?

A Lyapunov functional for the wave equation

$$\begin{cases} z_{tt}(x,t) = c^2 z_{xx}(x,t), \\ z(0,t) = 0, \\ z_x(0,t) = 0. \end{cases}$$

A Lyapunov functional for the wave equation

$$\begin{cases} z_{tt}(x,t) = c^2 z_{xx}(x,t), \\ z(0,t) = 0, \\ z_x(0,t) = 0. \end{cases}$$

Change of coordinate

$$\chi(x,t) = \begin{bmatrix} z_t(x,t) + c z_x(x,t) \\ z_t(1-x,t) - c z_x(1-x,t) \end{bmatrix} = \begin{bmatrix} \chi^+(x,t) \\ \chi^-(x,t) \end{bmatrix}$$

A Lyapunov functional for the wave equation

$$\begin{cases} z_{tt}(x,t) = c^2 z_{xx}(x,t), \\ z(0,t) = 0, \\ z_x(0,t) = 0. \end{cases} \Rightarrow \begin{cases} \chi_t(x,t) = c\,\chi_x(x,t), \\ \chi(0,t) = 0_{\mathbb{R}^2}. \end{cases}$$

Change of coordinate

$$\chi(x,t) = \begin{bmatrix} z_t(x,t) + cz_x(x,t) \\ z_t(1-x,t) - cz_x(1-x,t) \end{bmatrix} = \begin{bmatrix} \chi^+(x,t) \\ \chi^-(x,t) \end{bmatrix}$$

A Lyapunov functional for the wave equation

$$\begin{cases} z_{tt}(x,t) = c^2 z_{xx}(x,t), \\ z(0,t) = 0, \\ z_x(0,t) = 0. \end{cases} \Rightarrow \begin{cases} \chi_t(x,t) = c\,\chi_x(x,t), \\ \chi(0,t) = 0_{\mathbb{R}^2}. \end{cases}$$

Change of coordinate

$$\chi(x,t) = \begin{bmatrix} z_t(x,t) + cz_x(x,t) \\ z_t(1-x,t) - cz_x(1-x,t) \end{bmatrix} = \begin{bmatrix} \chi^+(x,t) \\ \chi^-(x,t) \end{bmatrix}$$

Lyapunov functional [J.M. Coron, 2007]

$$S, R \in \mathbb{S}^2_+, \quad V_{PDE}(\chi) = \int_0^1 \chi^\top(x,t)\,(S + xR)\,\chi(x,t)dx$$

Naive Lyapunov functional

Finite dimension	Infinite dimension
$V_{ODE}(X) = X^\top P X$	$V_{PDE}(\chi) = \int_0^1 \chi^\top(x,t)\,(S + xR)\,\chi(x,t)dx$
$P \succ 0$	$R, S \succ 0$

Naive Lyapunov functional

Finite dimension	Infinite dimension
$V_{ODE}(X) = X^\top P X$	$V_{PDE}(\chi) = \int_0^1 \chi^\top(x,t)\,(S + xR)\,\chi(x,t)dx$
$P \succ 0$	$R, S \succ 0$

Coupled system [Tang & al., 2011 ; Epitia & al., 2016] :

$$V(X,z) = V_{ODE}(X) + V_{PDE}(\chi)$$

Naive Lyapunov functional

Finite dimension	Infinite dimension
$V_{ODE}(X) = X^\top P X$	$V_{PDE}(\chi) = \int_0^1 \chi^\top(x,t)\,(S + xR)\,\chi(x,t)dx$
$P \succ 0$	$R, S \succ 0$

Coupled system [Tang & al., 2011 ; Epitia & al., 2016] :

$$V(X, z) = V_{ODE}(X) + V_{PDE}(\chi)$$

Problem : X and χ are not coupled !

The projection methodology

Proposed in [Seuret et Gouaisbaut, 2015]. Let $\{e_k\}_{k\in\mathbb{N}}$ be an orthonormal basis of $L^2(0,1)$.

Original state	Estimated state
$X_\infty(t) = \begin{bmatrix} X(t) \\ \chi^+(\cdot,t) \\ \chi^-(\cdot,t) \end{bmatrix}$	$X_N(t) = \begin{bmatrix} X(t) \\ \langle \chi^+(\cdot,t), e_0 \rangle \\ \vdots \\ \langle \chi^-(\cdot,t), e_N \rangle \end{bmatrix}$
$\mathbb{R}^n \times L^2 \times L^2$	$\mathbb{R}^n \times \mathbb{R}^{2(N+1)}$

The projection methodology

Proposed in [Seuret et Gouaisbaut, 2015]. Let $\{e_k\}_{k\in\mathbb{N}}$ be an orthonormal basis of $L^2(0,1)$.

Original state	Estimated state
$X_\infty(t) = \begin{bmatrix} X(t) \\ \chi^+(\cdot,t) \\ \chi^-(\cdot,t) \end{bmatrix}$	$X_N(t) = \begin{bmatrix} X(t) \\ \langle \chi^+(\cdot,t), e_0\rangle \\ \vdots \\ \langle \chi^-(\cdot,t), e_N\rangle \end{bmatrix}$
$\mathbb{R}^n \times L^2 \times L^2$	$\mathbb{R}^n \times \mathbb{R}^{2(N+1)}$

$$V_N(X,u) = X_N^\top P_N X_N + V_{PDE}(\chi).$$

The projection methodology

Bessel Inequality

Let $\{e_k\}_{k\in[0,N]}$ be an orthonormal basis of $L^2(0,1)$ with respect to the scalar product $\langle\cdot,\cdot\rangle$. For any function $f \in L^2$, the following integral inequality holds for any $N \in \mathbb{N}$:

$$\langle f, f\rangle \quad \geq \quad \sum_{k=0}^{N} \langle f, e_k\rangle^2 .$$

Moreover, if $N \to +\infty$, equality holds (Perseval).

The projection methodology

Bessel Inequality

Let $\{e_k\}_{k\in[0,N]}$ be an orthonormal basis of $L^2(0,1)$ with respect to the scalar product $\langle\cdot,\cdot\rangle$. For any function $f \in L^2$, the following integral inequality holds for any $N \in \mathbb{N}$:

$$\langle f, f\rangle \quad \geq \quad \sum_{k=0}^{N} \langle f, e_k\rangle^2 .$$

Moreover, if $N \to +\infty$, equality holds (Perseval).

$$\forall t \geq 0, \quad \|X_\infty(t) - X_N(t)\|_{\mathbb{R}^n\times L^2\times L^2} \xrightarrow[N\to+\infty]{} 0$$

Interpretation of the methodology

The complete Lyapunov functional candidate should be of the following form :

$$V_c(X,\chi) = \int_0^1 \int_0^1 \begin{bmatrix} X \\ \chi(x_1) \end{bmatrix}^\top \begin{bmatrix} P & \mathcal{Q}(x_2) \\ \mathcal{Q}^\top(x_1) & \mathcal{T}(x_1,x_2) \end{bmatrix} \begin{bmatrix} X \\ \chi(x_2) \end{bmatrix} dx_1 dx_2 + V_{PDE}(\chi).$$

Interpretation of the methodology

The complete Lyapunov functional candidate should be of the following form :

$$V_c(X,\chi) = \int_0^1 \int_0^1 \begin{bmatrix} X \\ \chi(x_1) \end{bmatrix}^\top \begin{bmatrix} P & \mathcal{Q}(x_2) \\ \mathcal{Q}^\top(x_1) & \mathcal{T}(x_1,x_2) \end{bmatrix} \begin{bmatrix} X \\ \chi(x_2) \end{bmatrix} dx_1 dx_2 + V_{PDE}(\chi).$$

$$\mathcal{Q}(x_1) = \sum_{k=0}^{N} Q_k e_k(x_1), \quad \mathcal{T}(x_1,x_2) = \sum_{k=0}^{N}\sum_{i=0}^{N} T_{k,i} e_k(x_1) e_i(x_2),$$

Interpretation of the methodology

The complete Lyapunov functional candidate should be of the following form :

$$V_c(X,\chi) = \int_0^1 \int_0^1 \begin{bmatrix} X \\ \chi(x_1) \end{bmatrix}^\top \begin{bmatrix} P & \mathcal{Q}(x_2) \\ \mathcal{Q}^\top(x_1) & \mathcal{T}(x_1,x_2) \end{bmatrix} \begin{bmatrix} X \\ \chi(x_2) \end{bmatrix} dx_1 dx_2 + V_{PDE}(\chi).$$

$$\mathcal{Q}(x_1) = \sum_{k=0}^{N} Q_k e_k(x_1), \quad \mathcal{T}(x_1,x_2) = \sum_{k=0}^{N}\sum_{i=0}^{N} T_{k,i} e_k(x_1) e_i(x_2),$$

$$V_c = V_N \text{ where } P_N = \begin{bmatrix} P & Q_0 & \cdots & Q_N \\ Q_0^\top & T_{0,0} & \cdots & T_{0,N} \\ \vdots & \vdots & \ddots & \vdots \\ Q_N^\top & T_{N,0} & \cdots & T_{N,N} \end{bmatrix} \in \mathbb{S}^{n+2(N+1)}.$$

Stability Result

We choose the only polynomial orthogonal sequence of $L^2(0,1)$ equipped with its canonical inner-product : the Legendre polynomials.

Theorem (Barreau & al., 2018)

Let $N \geq 0$. Assume there exist $P_N \in \mathbb{S}_+^{n+2(N+1)}$ and $R, S \in \mathbb{S}_+^2$ such that the following LMI holds

$$\Psi_N \prec 0,$$

then there exists a unique solution to System (1) and it is exponentially stable in the sense of norm $\|\cdot\|_{\mathcal{H}}$ i.e. there exist $\gamma \geq 1, \delta > 0$ such that the following estimate holds :

$$\forall t > 0, \|(X(t), u(t), u_t(t))\|_{\mathcal{H}}^2 \leq \gamma e^{-\delta t} \|(X^0, u^0, v^0)\|_{\mathcal{H}}^2.$$

Sketch of proof

The proof follows this line :
If $\Psi_N \prec 0$ then there exists $\varepsilon_1, \varepsilon_2, \varepsilon_3 \in \mathbb{R}^{+*}$ s.t.

$$\begin{array}{rcrcr} \varepsilon_1 \|(X, u, u_t)\|_{\mathcal{H}}^2 & \leq & V_N(X_0, u) & \leq & \varepsilon_2 \|(X, u, u_t)\|_{\mathcal{H}}^2, \\ & & \dot{V}_N(X_0, u) & \leq & -\varepsilon_3 \|(X, u, u_t)\|_{\mathcal{H}}^2. \end{array}$$

To find $\varepsilon_1, \varepsilon_2, \varepsilon_3$, we need Bessel's inequality.

Sketch of proof

The proof follows this line :
If $\Psi_N \prec 0$ then there exists $\varepsilon_1, \varepsilon_2, \varepsilon_3 \in \mathbb{R}^{+*}$ s.t.

$$\begin{array}{rcrcr} \varepsilon_1 \|(X,u,u_t)\|^2_{\mathcal{H}} & \leq & V_N(X_0,u) & \leq & \varepsilon_2 \|(X,u,u_t)\|^2_{\mathcal{H}}, \\ & & \dot{V}_N(X_0,u) & \leq & -\varepsilon_3 \|(X,u,u_t)\|^2_{\mathcal{H}}. \end{array}$$

To find $\varepsilon_1, \varepsilon_2, \varepsilon_3$, we need Bessel's inequality.

1. Then, V_N is equivalent to $|| \cdot ||_{\mathcal{H}}$
2. $\forall t \geq 0, \quad \dot{V}_N(t) < 0$ if and only if $(X,u,u_t) \neq 0$

$\Rightarrow$ the unique solution to System (1) converges exponentially to $0_{\mathcal{H}}$.

Some remarks on Theorem 2

Remark

A necessary conditions for Ψ_N to be negative definite is :

$$c_0 > 0.$$

Some remarks on Theorem 2

Remark

A necessary conditions for Ψ_N to be negative definite is :

$$c_0 > 0.$$

Remark

The proof of this theorem relies on ***Bessel Inequality*** *and if we denote by*

$$\mathcal{C}_N = \left\{ c > 0 \text{ s.t. } \exists P_N \in \mathbb{S}_+^{n+2(N+1)}, S, R \in \mathbb{S}_+^2, \Psi_N \prec 0 \right\},$$

it can be proven that $\mathcal{C}_N \subseteq \mathcal{C}_{N+1}$. There is a ***hierarchy*** *of LMI conditions.*

Back to the drilling

Stability Result

Theorem (Barreau & al., 2018b)

Let $N \geq 0$. Assume there exist $P_N \in \mathbb{S}_+^{n+2(N+1)}$ and $R, S \in \mathbb{S}_+^2$ such that the following LMI holds

$$\Theta_{N,\alpha} \prec 0,$$

then there exists a unique solution to drilling pipe system and it is α-exponentially stable in the sense of norm $\|\cdot\|_{\mathcal{H}}$ i.e. there exist $\gamma \geq 1$ such that the following estimate holds :

$$\forall t > 0, \|(X(t), u(t), u_t(t))\|_{\mathcal{H}}^2 \leq \gamma e^{-\alpha t} \|(X^0, u^0, v^0)\|_{\mathcal{H}}^2.$$

Remark

A necessary condition for $\Theta_{N,\alpha} \prec 0$ *are :*

$$\alpha \leq \alpha_{max} = \max\left(\frac{c}{2}\log\left|\frac{(ck+1)(cg+1)}{(ck-1)(cg-1)}\right|, 0\right)$$

Remark

A necessary condition for $\Theta_{N,\alpha} \prec 0$ *are :*

$$\alpha \leq \alpha_{max} = \max\left(\frac{c}{2}\log\left|\frac{(ck+1)(cg+1)}{(ck-1)(cg-1)}\right|, 0\right)$$

	$N=0$	$N=1$	$N=2$	$N=3$	α_{max}
FF control	0.2157	0.2159	0.2159	0.2159	1.23
CL control	0.4972	0.4972	1.000	1.000	1.23

TABLE – Estimated decay-rate α using hierarchical Lyapunov functionals.

Simulations & Results

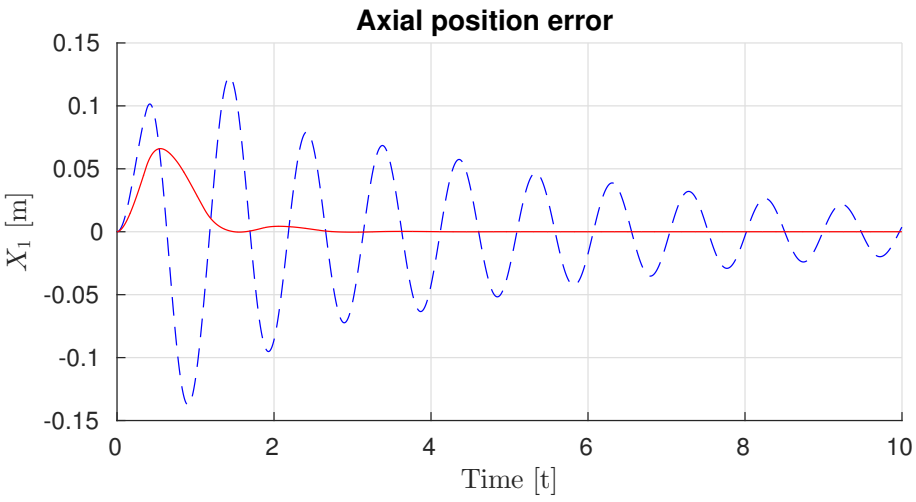

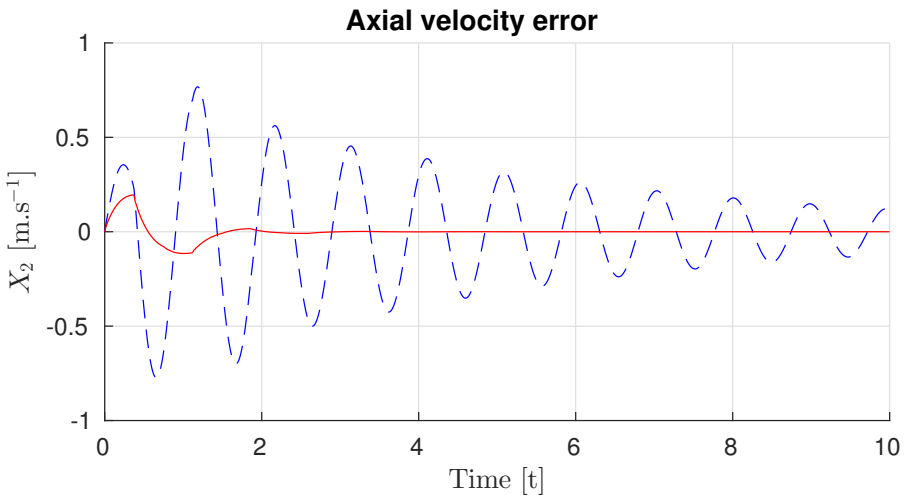

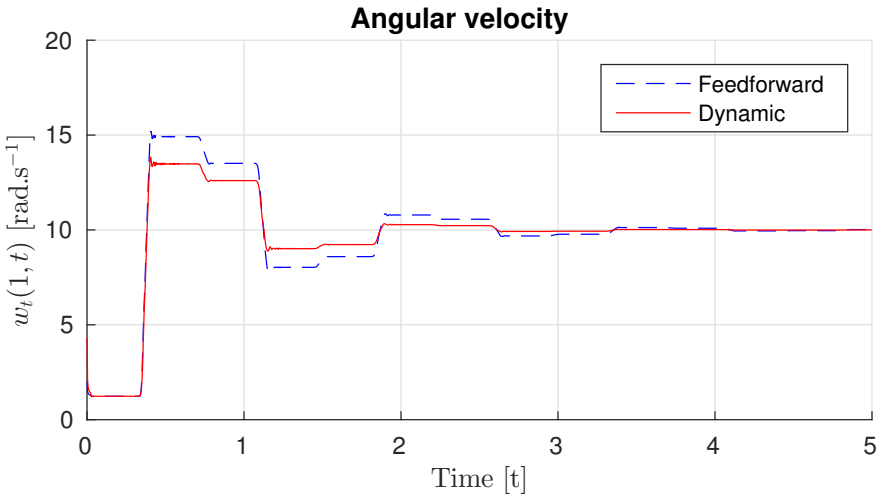

Conclusion & Perspectives

Conclusion & Perspectives

Summary :

1. We proposed a Lyapunov functional for a coupled ODE / string equation ;
2. Its efficiency has been tested on a driling mechanism.

Conclusion & Perspectives

Summary :

1. We proposed a Lyapunov functional for a coupled ODE / string equation ;
2. Its efficiency has been tested on a driling mechanism.

Perspectives :

1. Include non-linearities inside the ODE system ; Saturation, sampling...
2. Move from stability analysis to synthesis of controllers ;
3. Study other kinds of PDEs...

References I

[Saldivar & al., 2015] B. Saldivar, I. Boussaada, H. Mounier, and S.-I. Niculescu
Analysis and Control of Oilwell Drilling Vibrations : A Time-Delay Systems Approach.
Springer, 2015.

[J. M. Coron., 2007] J. M. Coron.
Control and nonlinearity.
Mathematical Surveys and Monographs, 2007.

[Challamel, 2000] N. Challamel.
Rock destruction effect on the stability of a drilling structure.
Journal of sound and vibration, 2000.

[Saldivar & al., 2016] B. Saldivar, S. Mondié, and J. C. Ávila Vilchis.
The control of drilling vibrations : A coupled PDE-ODE modeling approach.
International Journal of Applied Mathematics and Computer Science, 2016.

[Karnopp, 1985] D. Karnopp.
Computer simulation of stick-slip friction in mechanical dynamic systems.
Journal of dynamic systems, measurement, and control, 2016.

[Espitia & al. , 2016] N. Espitia, A. Girard, N. Marchand, and C. Prieur.
Event-based control of linear hyperbolic systems of conservation laws.
Automatica, 2016.

References II

[Tang & al. , 2011] S. Tang and C. Xie.
State and output feedback boundary control for a coupled PDE–ODE system.
System & Control Letters, 2011.

[Seuret et Gouaisbaut, 2015] A. Seuret and F. Gouaisbaut.
Hierarchy of LMI conditions for the stability analysis of time delay systems.
Systems & Control Letters, 2015.

[Barreau & al., 2018a] M. Barreau, A. Seuret, F. Gouaisbaut, and L. Baudouin.
Lyapunov stability analysis of a string equation coupled with an ordinary differential system.
IEEE Trans. Automatic Control, 2018.

[Barreau & al., 2018b] M. Barreau, A. Seuret and F. Gouaisbaut.
Exponential Lyapunov Stability Analysis of a Drilling Mechanism.
CDC Miami, 2018.

[Terrand, 2018] A. Terrand-Jeanne, V. Dos Santo Martins, and V. Andrieu.
Regulation of the downside angular velocity of a drilling string with a P-I controller.

ECC Chypre, 2018.

Questions ?

Thanks!

Questions ?